EDITORIAL

VALUATION of about forty per cent of the railroad property in the Western division has been completed by the Interstate Commerce Commission.

TO BE an engineer, is to be versatile; in short, one must be able to tackle any job and get away with it, somehow. It has remained to the city of Santa Monica to plumb the depths of an engineer's functions, and if the city engineer of that beautiful southern California city can execute the directions given him a short time ago, he should be decorated with the order of Anthony Comstock. In common with most beach resorts, Santa Monica, in the person of its city fathers, has been much perturbed over the relative propriety of different types of bathing suits. Discussion of this character, perhaps, is not germane to this type of journal, but when it is stated that the city engineer has been directed by the said city fathers, severally and jointly, forthwith, to wit, at once, to prepare suitable plans, specifications, blue prints, etc., for a standard type of bathing suit to be officially adopted as the *sine qua non* of the Santa Monica beach, then it is time to interfere in the name of humanity. The engineer has trouble enough as it is.

Bridges and Tunnels for San Francisco Bay

It is not so very long ago that certain residents of Alameda county tried to enlist the aid of the California Railroad Commission in obtaining reduced commutation rates. Now, however, through the assistance of an interesting campaign of publicity recently conducted through the columns of the daily press, the commuter has been regaled with projects for bridges at a cost of $22,000,000 and upward. An association of Eastern engineers has submitted to the various chambers of commerce in the interested cities tentative plans for a trans-bay bridge and has succeeded also in interesting the Federal government to the extent of having an official inquiry made by a board of army engineers in San Francisco. To the average outsider, one of the most impressive features of the hearings was that while they were called originally for the purpose of considering only the Watson-Miller plans, so many other engineers gave evidence of having devoted much time and thought, not only to the engineering but also to the financial features of the various possible methods of crossing San Francisco bay. The Fowler plan is familiar to our readers through the article published in this journal some months ago, but the other bridge and tunnel plans were practically unknown. We cannot but admire this industry, regardless of whether it may receive any reward other than that commonly attributed to virtue.

Turning to practical considerations, everyone admits that improved transportation facilities across San Francisco bay, like communication with Mars, would be a good thing if it were feasible. First the consent of the Federal Government must be obtained. No bridge or tunnel project can be undertaken at all unless it is satisfactory to the War Department engineers. This, we believe, eliminates from consideration the von Falkenburg plan. Pontoon bridges are useful for temporary structures, and it is not impossible that one of these days they may be adopted for permanent bridges, but this will be a matter of development in which they will have to be tried and proved successful in many less important situations before a scheme of this kind can receive approval for so monumental a structure as a bridge across San Francisco bay.

The same consideration applies to the unique and possibly feasible plan proposed by Mr. Little. The possibilities of interference with tidal currents resulting from the long concrete tubes by which transition is to be made from bridge to tunnel and vice versa are so difficult to determine that the War Department would probably prefer that the experiment be tried where a less important harbor is at stake. It is true that a slavish following of precedent would stop engineering progress altogether, and that the very originality of many of the schemes proposed is not in itself a bar to their practical application, but where great interests are at stake one cannot dismiss such details with a mere wave of the hand.

Safety is obviously of prime importance, especially in a locality subject to seismic disturbance. It would appear, however, that any of the proposed bridges or tunnels submitted would be acceptable to the army engineers so far as this feature is concerned. Then comes the financial question. Any of the projects proposed could undoubtedly be constructed if someone could be found who could and would pay the bills. The absence of definite information regarding the character of foundations available along the routes of any of the projects precludes making any but the most approximate estimates of the comparative cost. It would be a matter of considerable expense to secure adequate data on foundations, and it would appear that funds will have to be provided from somewhere to make such examinations before the question of either bridges or tunnels can ever get beyond the stage of interesting academic discussion. The length of span and height of clearance are details which the War Department would have to determine and which would be influential factors as affecting the cost of the structures.

Reverting to the financial side of the scheme, it seems

Generated on 2024-09-30 01:14 GMT / https://hdl.handle.net/2027/uiug.30112007838425
Public Domain, Google-digitized / http://www.hathitrust.org/access_use#pd-google
Digitized by Google
Original from UNIVERSITY OF ILLINOIS AT URBANA-CHAMPAIGN

reasonable that the greater part of the cost of any structure would have to be borne directly or indirectly by the transportation companies handling local and other railroad traffic. Another thing is that the cost of a double-tube tunnel would undoubtedly be less than that of any bridge that would be satisfactory to the War Department, or, for that matter, to anybody else. Such a structure would be adequate to meet the needs of both local and through passenger traffic for many years, and it is possible that the capitalized value of the original saving in cost would be sufficient to provide funds for constructing two additional tubes when they were needed.

The tunnel plan proposed by Mr. Newman is the only one to provide for vehicular traffic, and we doubt whether it would be desirable to send such traffic through a tunnel four or five miles long. The difficulties of ventilation and danger of explosion from leaky gasoline tanks are among the most serious objections. The so-called pleasure motorist probably would prefer to use some other means of crossing the bay. If a tunnel should be constructed, it would probably provide for railway traffic only. If we take the total cost of building a tunnel, add thereto the cost of necessary changes of terminals for the various railroads, and then do the same in the case of the bridge, the difference will represent the amount appropriately chargeable to the cost of providing for vehicular traffic. What this would amount to we do not know. Such an expenditure, if made, would benefit the pleasure motorist principally, since commercial vehicles, both motor and horse-drawn, are now practically as well served by ferries as they would be by a bridge.

In conclusion, it appears that if the railroad companies cannot be convinced that the construction of a tunnel would be to their advantage, neither bridge nor tunnel will be constructed. If the railroads can be so convinced and are left to go it alone, it is probable that they would adopt a tunnel plan; if the motorists of the bay cities desire to cross the bay otherwise than on a ferry-boat, let them break into the baby's bank and contribute the money to make up the difference in cost.

A Real Civil Service Examination

Civil service examinations for engineering positions within the gift of the Federal and State governments have served one useful purpose, namely, as a theme for the jokesmith. It is undoubtedly a useful thing to be able to name the emperors in the Wing dynasty of China, or perhaps to give a succinct account of the agricultural resources of Teheran, but most of us have wondered what all this had to do with the fitness of candidates for engineering positions. We admit, of course, that the above remarks, savor somewhat of hyperbole, nevertheless they serve a useful purpose in calling attention to the fact that the average civil service examination as at present conducted, gives a fair conception of the scholastic attainments of the candidate and entirely fails to indicate his experience, executive ability, and other characteristics, which are the chief factors determining the selection of an engineer by private individuals in commercial life. Most engineers whose names are known from San Francisco to New York as men of great executive ability, coupled with the creative faculty, without which no great engineering projects are possible, would be deep in the mud if confronted with an examination based on the contents of some of their college text-books. Their time is too valuable to have to fuss with the mere mechanics of engineering. The civil service examinations fail to differentiate between the engineer, and the draftsman or computer. How this works out in actual practice is an old story. There have been instances where a continued succession of men taken from civil service eligible lists have gone into the field to some worried-to-death engineer, and have driven him almost frantic with their total ignorance of practical considerations, until the poor fellow has finally been permitted to select his own men and get them on the pay-roll through the pleasing fiction of temporary appointments. The old 'spoils system,' which foremost thinkers on political economy have been trying to avoid, had its good points in that there was some chance for the exercise of discretion in the selection of men. Even where notorious political bosses have obtained for themselves appointments to positions requiring a high degree of technical skill, they have, in some cases, had sufficient sense to hire someone as an assistant who could supply the knowledge that they lacked.

Now comes the State Civil Service Commission of California, which has proposed a method of conducting examinations for State engineering appointments radically different from the old-time way of doing things. In this issue will be found mention of examinations for the positions of superintendent of construction and assistant State engineer. These positions obviously require the kind of knowledge, judgment, tact and ability to handle the work that can come only from the bitter school of experience. Text-books, reference books, and a knowledge of calculus and physical geography have their uses as a means to an end, but without experience they are like a cold chisel, a hack-saw, and a hammer in unskilled hands, excellent tools without the ability to work. The Commission has prepared an examination that sinks scholastic ability into the background and emphasizes means of determining the candidate's general knowledge of fundamental principles rather than skill in mental gymnastics. The statement of experience, which the examiners will, of course, verify carefully, is given more credit than the written test, while no less than 35 points out of a total of 100 are to be based upon the results of an oral examination, or rather, a personal interview with the members of an examining board composed of men of high standing in their profession. The State Civil Service Commission is entitled to hearty commendation for the position that it has taken. We believe that the engineering profession, as a whole, will stand back of its efforts to obtain men whose abilities measure up to the importance of the work that they will have to do.

Generated on 2024-09-30 01:10 GMT / https://hdl.handle.net/2027/uiug.30112007838425
Public Domain, Google-digitized / http://www.hathitrust.org/access_use#pd-google
Digitized by Google
Original from UNIVERSITY OF ILLINOIS AT URBANA-CHAMPAIGN

REVIEW OF THE MONTH

THE Willamette Pacific Railroad has been completed. It is a subsidiary of the Southern Pacific Co. and runs from Eugene to Marshfield and other Coos Bay points. The line is 121 miles long and is of first-class construction throughout. There are 39 steel bridges and nine tunnels, of which the longest is 4200 feet. This road will open for development a rich timber and agricultural country, most of which, thus far, has lain idle, waiting for adequate transportation.

A SMALL majority of the Oakland, California, voters has approved the project promulgated by Mr. F. M. Smith, granting to him and his associates a 99-year lease of reclaimed land on the city water front between the Southern Pacific and Key Route piers. A light vote was cast at the election, and opponents of the measure have stated that they will not abandon the fight. An ordinance by the city council and an enabling act by the State legislature must be passed before the lease can be granted.

THE California Southern Railroad has been completed from Blythe Junction, a point on the main line of the Atchison, Topeka & Santa Fe Railroad, to Blythe, in the Palo Verde valley, Riverside county, California. Agricultural conditions in the Palo Verde valley, both as regards climate and soil, are similar to those in the Imperial valley. Nevertheless, the 40-mile haul to the nearest railroad point has effectually prevented development in the past. Water for irrigation is obtained from the Colorado river, the original filing dating back to 1877. The railroad was first projected in April of last year, when the business depression resulting from the War was at its worst. In spite of this obstacle, 14 miles was built in 1915, said to have been the longest single stretch of new line constructed anywhere in the United States during that year. The road is 42 miles in length. In addition to agricultural products, gypsum and manganese will be brought within reach of markets by its construction.

IN a number of instances, water is more valuable than the land depending upon it for fertility. Nevertheless, many Western States have based their water regulations on the common law, which had its inception in humid localities. This has been the case in spite of the absurdity of assuming that in an irrigated country the water of a stream should flow in undiminished quantity past the lands of each riparian owner. A few years ago the Oregon legislature enacted a water code that had the novel feature of being framed to suit conditions as they existed in the State, whose prosperity depended upon making the most beneficial use of all water resources. We commend to our readers the article in this number by Mr. John H. Lewis, state engineer of Oregon. Since Washington conditions are somewhat similar to those obtaining in several other western States, we believe that engineers, who are interested in water development will find helpful suggestions in Mr. Lewis' account of how this water code has worked in practice.

ON September 1, the Associated Oil Company is to discontinue the practice of adding water to crude oil before pumping through its rifled pipe-line. Crude oil is a difficult liquid to pump under the best of circumstances. The rifled pipe-line was designed, we believe, by Mr. John D. Isaacs. It was the theory that water mixed with oil would separate when pumped in the rifled line, the water going to the outside and performing the function of a lubricant, thus reducing the coefficient of friction and requiring less pump-pressure. The oil and water, however, formed an emulsion requiring additional water at the several pumping-stations along the line, and expensive apparatus at the end of the line with which to dehydrate the oil. Now that the water scheme has been abandoned, additional pumping-stations have been installed, in order to provide the higher pressure caused by the increase in friction head. Except for continuing to use the rifled pipe-line, the Associated practice in pumping oil is now the same as that of the other companies.

EVERYBODY nowadays understands the dread significance of No Man's Land, a term applied by War correspondents to the barren waste separating the trenches of the opposing forces. Rivalry between certain California cities has created another type of No Man's Land. The cities of Pasadena, South Pasadena, and Alhambra have formulated a co-operative agreement for the solution of their joint sewage-disposal problems. The plans contemplated the purchase of a tract about three miles south of the last-named city for a sewer-farm. The land directly adjoining this tract is sparsely populated, but not so much so as to prevent a vociferous protest from the residents, the words sewer-farm carrying with them a most unsavory significance. The opposition in this particular case took the form of a movement to incorporate the small communities affected and include therein the proposed sewer-farm. An election was held and a large majority voted for the incorporation of a new city to be called Monterey Park. As a counter move, the city of Alhambra held a little election on its own hook and duly annexed the sewer-farm site with some adjacent territory. It is now up to the courts to decide whether the disputed strip is legally in Monterey Park or in Alhambra. If the jurisdiction of the former is established, the cities owning the property will have to

Generated on 2024-09-30 01:11 GMT / https://hdl.handle.net/2027/uiug.30112007838425
Public Domain, Google-digitized / http://www.hathitrust.org/access_use#pd-google
Digitized by Google
Original from UNIVERSITY OF ILLINOIS AT URBANA-CHAMPAIGN

find some other tract for a site for their projected sewer-farm.

SAN DIEGO county, California, is to be congratulated on the prospect of having its highway construction and maintenance in the hands of one competent superintendent. At any rate, this course has been recommended by a committee appointed to investigate the entire question. The report would indicate that the members of the committee, like so many other laymen of good intentions, are somewhat confused regarding the province and duties of a highway engineer; for instance, we find that the committee recommends that the office be filled by "a practical road-builder rather than a road engineer, since competent engineers are already available from the county surveyor's office."

WE do not know whether or not the county surveyor's staff includes men who have had sufficient experience and are otherwise qualified to handle the engineering work in connection with the construction and maintenance of modern highways. San Diego county has a large area, and varied climatic and other conditions. It is fast becoming recognized that the practical road-builder of today is first of all a trained engineer. California has many roads built by so-called 'practical road-builders' whose intentions, however good, have resulted in the waste of thousands of dollars of tax-payers' money, and we venture to express the hope that San Diego county may follow the example of the State of California, and appoint a real engineer to manage its highways, and not a mechanic or ex-boss of a road gang—not in the least to disparage the work of the latter but merely in the interests of a desire to have the high standard of work on the State highway extend to the various counties tributary thereto.

A SOMEWHAT amusing concession to the politics of what we hope may some time be by-gone days is conveyed in the suggestion that the mileage allowance for members of the Board of Supervisors need not be curtailed by the adoption of this system. It is pointed out that it would be necessary that they inspect the work in their respective districts frequently to see that it is properly done. If the right kind of a superintendent is selected, we do not believe that inspections from boards of supervisors will help very much. On the contrary, supervisorial junkets at county expense will be little more than an unmitigated nuisance. Perhaps it would have been better had the committee ditched the old mileage system in its recommendations altogether, but we suppose that it would be too much to expect of any political body to act upon a suggestion that would take even a small bite out of their portion of pork.

OVER in Orange county, however, there is a man that makes no attempt at compromising with the old system. This is Mr. S. H. Finley, whose candidacy for supervisor from the district that includes the city of Santa Ana was mentioned in our last number. Mr. Finley is a real 'practical road-builder,' who, it will be remembered, has been chief engineer for the County Highway Commission, which has now about completed the construction of an excellent system of permanent highways, and has maintained these highways after being completed. The original bond issue was for $1,270,000, with which it was proposed to construct 107 miles of road. Not only was this mileage completed, but about 30 miles more was constructed with the unexpended balance. Mr. Finley has issued a statement to the voters of the county, a large part of which is of interest as disclosing conditions which might be duplicated in almost any county in California, or for that matter in the United States. He states: First, that the Board of Supervisors has expended the following amounts, mainly for temporary work on the miscellaneous roads of the county, in addition to the amounts expended by the County Highway Commission in the construction of the paved highways:

During 1912-13	$195,467.61
During 1913-14	157,735.44
During 1914-15	221,176.54
During 1915-16	246,333.30
	$820,712.89

Second, that nearly all of the above amount was expended under the direction of 25 different road foremen, who were without any special training or qualifications for the work. Third, that during the last two years an average of approximately $300 per mile per year has been spent on road maintenance and supervision, in addition to what was spent by the County Highway Commission upon the roads built under the bond issue. Fourth, that the County Highway Commission expended less than $100 per mile during the last year for repairs, including the damage done by the floods of last winter. Fifth, that notwithstanding approximately 200 miles of permanent roads, including the State highway, has been built during the past four years, taking three-fourths of the traffic of the county, $246,000 was expended on the other roads during 1915-16, while only $158,000 was spent in 1913-14 on practically all the roads, since only a few miles of paved road had been built at that time. Sixth, that at least $30,000 per year could be saved if an efficient, capable, and courageous road-builder were put in charge of the work, unhampered by obligations to friends and voters other than the obligation to get good results, and free from any pressure to appoint inefficient subordinates because of their supposed influence in the different communities. Seventh, that there has probably been no dishonesty in the past, merely inefficiency.

IN presenting this interesting statement we have no desire to 'knock' Orange county, or to influence the political campaign there this fall. Conditions there as regards highway administration are no worse than in most California counties. In fact, we believe that they are considerably better. The difference is that Orange county happens to be fortunate enough to possess a citizen who knows what he is talking about, and who has the courage of his convictions.

Generated on 2024-09-30 01:11 GMT / https://hdl.handle.net/2027/uiug.30112007838425
Public Domain, Google-digitized / http://www.hathitrust.org/access_use#pd-google
Digitized by Google
Original from UNIVERSITY OF ILLINOIS AT URBANA-CHAMPAIGN

DISCUSSION

A Highway Bridge of Unusual Design

The Editor:

Sir—The structure shown in the accompanying sketch is a covered wooden Howe truss bridge over the south fork of the Santiam river at Cascadia, Oregon, a small summer resort at the edge of the Cascade range. It is on the county road, which is used by nearly all the traffic along the river. It was built in 1915 by the county commissioners with some local assistance. A number of automobile parties with camp outfits, ranchers' teams, and freight wagons use it. In spite of the fact that the road is rough, some fairly heavy loads are carried over it.

The bridge has a span of 116 ft. The roadway is 16 ft. in the clear, and the depth of trusses, 15 ft. The height above the river is between 35 and 40 ft. Except for the vertical rods, plate-washers for the rods, and nails, the structure is entirely of wood, Douglas fir being used. Timber can be obtained easily on the site, but metal had to be hauled 32 miles over rough roads. The larger timbers were mainly hewed out as they could not be cut in the small local mill.

The bottom chords are 12 by 14 in. by 120 ft. without a splice. They are good timbers. The top chords are also single sticks. Referring to the sketch, *AL* is 12 by 12 in., *BM* is 10 by 12 in., *CN* is 9 by 12 in., *DP* is 7 by 12 in., *AN*, *BP*, and *CQ* are 3 by 8 in., *AM* is composed of two $1\frac{1}{4}$-in. rods, *BN* of two $1\frac{1}{8}$-in. rods, *CP* of two 1-in. rods, and *EQ* of two $1\frac{1}{4}$-in. rods. All the rods are upset. The bridge has no sway bracing, top lateral-diagonals, nor portals. There are top struts as follows: an 8 by 10-in. at *A*, a 4 by 10-in. at *B*, a 4 by 5-in. at *C*, and an 8 by 10-in. at *E*. The halves of the truss are symmetrical with regard to sizes of members.

The floor-beams, which are 10 by 12 in., are hung below the bottom chords on the vertical rods. There are seven 3 by 12-in. stringers set on the beams. The bottom lateral bracing is made of partly-hewed poles having a diameter of about 6 in. They are spiked to the under side of the bottom chords. The bridge has a gable roof and covered sides. These stiffen it somewhat, but add to the wind stresses.

The most important defect is the fact that the centre floor-beam, which carries 22 lin. ft. of the floor, is hung by the vertical rods from the centre of the top chords on a 20-ft. span, thus causing heavy bending stresses in the chords. There are no diagonals in the central portion of the bridge, and it is 20 ft. between the upper ends of the nearest two. The chords are 12 by 12 in. and there are two $1\frac{3}{4}$-in. vertical rods, upset. At 15,000 lb. per sq. in. these would carry 36,600 lb. This would produce a fibre stress in the chord, due to bending, of 6100 lb. per sq. in., allowing 20% for continuity of the chord and neglecting reduction of strength caused by the cuts for diagonals. The ultimate strength of Douglas fir in bending is from 5000 to 5400 lb. per sq. in. The other vertical rods are not well proportioned to take the increasing shear toward the ends of the bridge.

It is not likely that the live load will exceed 60 lb. per sq. ft. on any large portion of the bridge. This is 960

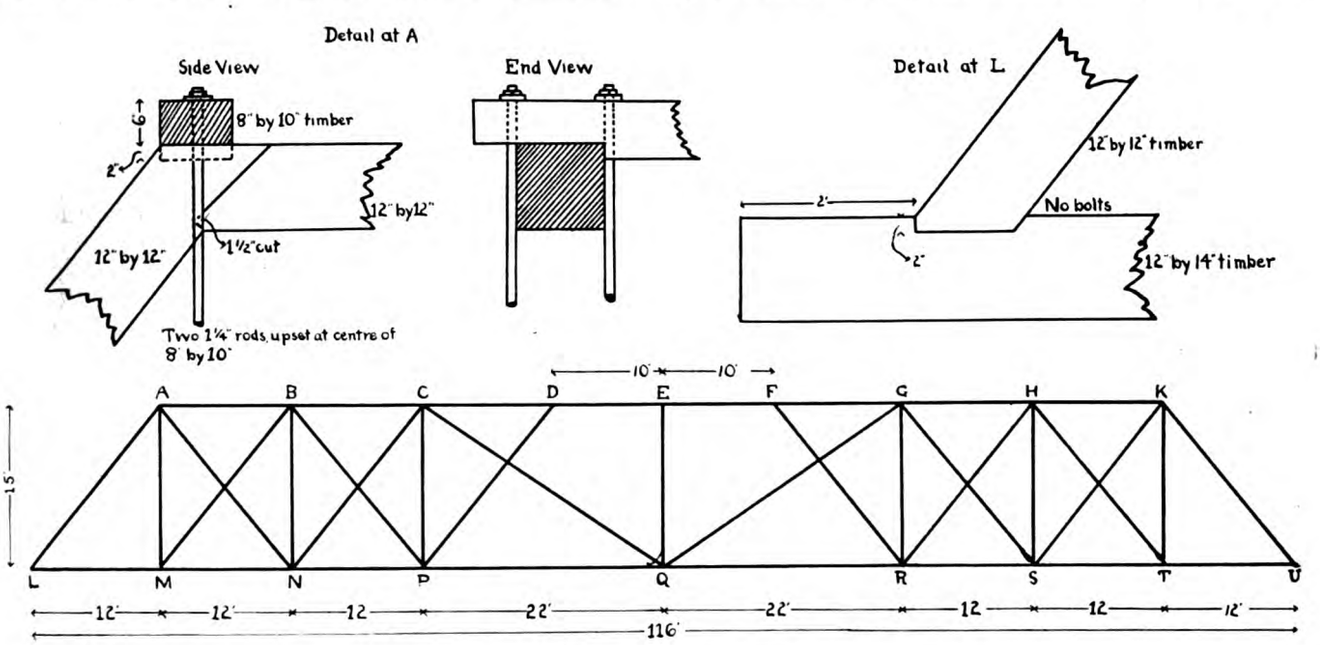

SKETCH OF BRIDGE.

Generated on 2024-09-30 01:12 GMT / https://hdl.handle.net/2027/uiug.30112007838425
Public Domain, Google-digitized / http://www.hathitrust.org/access_use#pd-google
Digitized by Google
Original from UNIVERSITY OF ILLINOIS AT URBANA-CHAMPAIGN

lb. per lin. ft. The dead load is 750 lb. On this basis, the stresses in the truss members are as follows:

In *AL*	57,000 lb.	In *CN*	30,600 lb.
" *LM* and *AB*	35,600 "	" *NP* and *CD*	82,100 "
" *AM*	44,500 "	" *CP*	23,900 "
" *BM*	43,800 "	" *DP*	12,000 "
" *MN* and *BC*	63,000 "	" *DE* and *PQ*	89,600 "
" *BN*	34,200 "	" *EQ*	18,800 "

The load in *EQ* would strain the centre floor-beam considerably. With this loading the direct stress in the top chord is 622 lb. per sq. in. and the bending stress is 3133 lb., allowing 20% for continuity as before, giving a total of 3755 lb. The usual working stress for Douglas fir is 1200 to 1600 lb., reduced by some column formula. The bottom chord cannot assist in taking the bending stress, as the floor-beam is hung on the rods.

There is no provision for moving live-loads. The counters are merely 3 by 8-in. pieces spiked at each end to the outside of the chords with two or three nails. The framing for the diagonals is similar to that for the batter post shown in the sketch.

Not far away, there is a 60-ft. bridge of similar construction. The centre floor-beam is hung from the top chord, but the distance between the upper ends of the inner diagonals is only 8 ft. The chords are also 12 by 12-in. timbers.

Both bridges were probably planned by the county bridge carpenter. It might be added that the workmanship is good, and that the bridges do not show evidence of any imminent failure.

HENRY BLOOD.

Portland, Oregon, July 17.

Signal Code for Surveying

The Editor:

Sir—During my experience as a field engineer and surveyor I have been surprised at the fact that there seems to be no simple and efficient wig-wag code in common use among engineers. There is, it is true, a generally recognized code of signals for the more common operations in the field, but a more elaborate system, which would cover any point which might arise, would result in the saving of much traveling and unnecessary work.

The wireless telephone is still out of the question, and the army and navy codes, while efficient, are too complicated. I have, therefore, devised a code, which, while comparatively slow, is efficient and may be learned in two hours practice at short distance.

In the starting position both hands rest on the breast and after each signal return to the same position. The different signals, corresponding to the illustrations, are 1, 2, 3, 4, 5, 6, 7, 8, 9, and 0, and are self explanatory. For the alphabet the numbers corresponding to the alphabetic positions of the letters are given; that is A-1, T-20, Z-26, etc. The letters are separated by a dip and the words by a rise, both of which are shown. The dip and rise also indicate that letters, and not numbers are being given. The signals are shown in the accompanying illustration, commencing with 1 at the left, the positions from start, rise, and dip being on the right.

Convenient practice may be had by two persons standing at opposite ends of a room and sending any copy, such as columns of figures, that may be at hand.

W. R. SHERMAN.

Newman, California, August 16.

OIL GROOVES IN BEARINGS

The following recommendations regarding oil grooves in bearings are made by C. N. Scott, in *Oildom*. In general, the enveloping surface should be the one that is grooved. There are some exceptions, notably the bearing surfaces of the shoes of a cross-head, which should be grooved, and not the bearing surfaces of the bored guides. In no case should both the enveloped and the enveloping surface be grooved. A general rule for the width of groove is to multiply the diameter of the shaft or pin by 0.01 and add 0.1 inch. The depth should be half the width. All corners of grooves should be rounded. The oil grooves should be arranged with reference to the direction of motion of the ungrooved surface on the grooved one, as with a faulty arrangement the grooves may work the oil out of a bearing instead of toward the centre of it. In general, grooves should be kept from $\frac{3}{4}$ to $1\frac{1}{2}$ in. away from the edges of the bearing surface, depending upon the size of the journal. If they are much closer the oil will escape. All grooves should be smooth and regular.

Drills that are properly hardened and pointed are often condemned on account of breakage when the trouble should be charged to the drilling machine. If there is any spring, lost motion, or backlash between the upper part of the machine and the table, the drill will not begin to cut until the pressure has taken this up, after which the feed will be practically constant until the point of the drill breaks through. As this happens, the resistance to the drill is abruptly reduced, and any spring or backlash in the machine will cause the drill to 'hog in.' The sudden increase in torsional stress resulting frequently causes drills to break.

SIGNALS FOR SURVEYING.

Generated on 2024-09-30 01:11 GMT / https://hdl.handle.net/2027/uiug.30112007838425
Public Domain, Google-digitized / http://www.hathitrust.org/access_use#pd-google
Digitized by Google
Original from UNIVERSITY OF ILLINOIS AT URBANA-CHAMPAIGN

Bridge and Tunnel Projects Across San Francisco Bay*

In response to requests from the Chambers of Commerce of San Francisco, Oakland, Berkeley, and Alameda, and other interested parties, the War Department arranged for hearings concerning the various bridges and tunnels for crossing San Francisco bay. The board of army engineers included Colonel Thomas H. Rees, presiding, Lieutenant-Colonel Charles L. Potter, and Major George B. Pillsbury. Hearings were held August 15 at the San Francisco Chamber of Commerce and August 17 at the Hotel Oakland. In opening the hearings Colonel Rees read a letter of instructions from Major-General W. H. Black, in which attention was called to the fact that while the clearance of 135 ft. provided by the East River bridges at New York was considered ample at the time they were constructed, they have since become a serious hindrance to navigation. It was also pointed out that the delays resulting from opening drawbridges on rapid-transit routes are a serious disadvantage of that type of construction.

The plan proposed by Wilbur J. Watson, of Cleveland, Ohio, Harlan D. Miller of Albany, New York, and William R. Davis of Albany, New York, provides for a structure starting from the corner of First and Adeline streets, Oakland, and crossing the Oakland estuary at right angles at a point about 6000 ft. from the entrance. At this point the channel is straight. From this point the structure crosses the bay, landing on the San Francisco side directly over pier No. 44. The total length will be 30,200 ft. Part of the structure on the Oakland side will be composed of a reinforced concrete trestle and embankment. The main portion of the bridge will be 17,400 ft. long, and will be composed of double-deck steel spans 200 to 250 ft. long, with a fixed vertical clearance of from 20 to 90 ft. above high water.

At the San Francisco side and 1000 ft. from the State bulkhead line, there will be two spans with a lateral clearance of 575 ft. and a vertical clearance of 115 ft. About one mile from the San Francisco shore a bascule span is provided with a lateral clearance of 250 ft. and a minimum vertical clearance of 200 ft. when the bridge is open. The 575-ft. spans are in the line of traffic and it is assumed will provide for a large majority of the vessels passing the bridge. The bascule span will provide for the larger vessels. It is estimated that at the present time this bridge would have to be opened about fifteen times a month. Across the Oakland estuary there is to be a bascule span with a lateral clearance of 200 ft. and a vertical clearance of 60 ft. above high water when the bridge is closed and 200 ft. when the bridge is open. At the present time this bridge would have to be opened about seven times per day. The reason for wishing to keep the height of the estuary span at a minimum is that on account of the right-angle crossing, sharp curves are necessary at each side and it is desired to keep the grade and incidentally the embankment as low as possible.

The plans provide for four railroad tracks on the lower deck and three roadways on the upper, the centre roadway being devoted to fast-moving traffic and the two outer ones to slower vehicles. The substructure will consist of concrete piers founded on piles. The estimated cost of construction of the entire bridge including approaches is $18,700,000. Allowing $5,200,000 for land damages, interest during construction, engineering, and administrative charges, the total cost of construction is $23,900,000. To provide a 100-ft. clearance for the bascule span across the estuary would cost approximately $1,000,000 additional or $24,900,000 in all. Such a span would have to be opened about once a day at the present time. To construct a tunnel and leave the estuary entirely clear would cost about $3,000,000 additional, or $26,900,000 in all.

The present traffic across the bay amounts to 40,000,000 suburban passengers, 400,000 vehicles, and 372,000 passenger, express, and mail cars. Assuming a toll charge of 35 to 40c. per vehicle as against 75c. at present, 2½c. per suburban passenger, and $1.50 for all through railroad cars, the total revenue would be sufficient for interest and maintenance, and, with the probable increase of all kinds of traffic, to provide a sinking fund for retiring bonds.

At present there are five ferry systems, namely the Southern Pacific Oakland Pier system, the Southern Pacific Oakland Harbor system, the Southern Pacific Alameda Pier system, the Western Pacific Railroad, and the San Francisco-Oakland Terminal Railways, commonly called the Key Route, whose lines cross the bay approximately at right angles to the main shipping routes of the harbor. These systems operate 15 ferry boats making an average of 372 trips per day, or 136,000 trips per year. During the fogs that are frequent during some months, it is necessary to take many precautions, and in spite of such precautions there have been several collisions with considerable loss of property and some loss of life. The construction of the bridge and the consequent removal of the ferries would render navigation of the bay much safer.

The plan proposed by Charles Evan Fowler of Seattle, with whom are associated G. Lindenthal of New York City, F. C. Osborn of Cleveland, Ohio, C. B. Wing of Stanford University, and Edwin Duryea of San Francisco, is described in detail in an article by Mr. Fowler published in WESTERN ENGINEERING for September 1914. It provides for three 2000-ft. cantilever spans crossing the bay between Goat Island and Telegraph hill, having

*Staff article.

Generated on 2024-09-30 01:17 GMT / https://hdl.handle.net/2027/uiug.30112007838425
Public Domain, Google-digitized / http://www.hathitrust.org/access_use#pd-google
Digitized by Google
Original from UNIVERSITY OF ILLINOIS AT URBANA-CHAMPAIGN

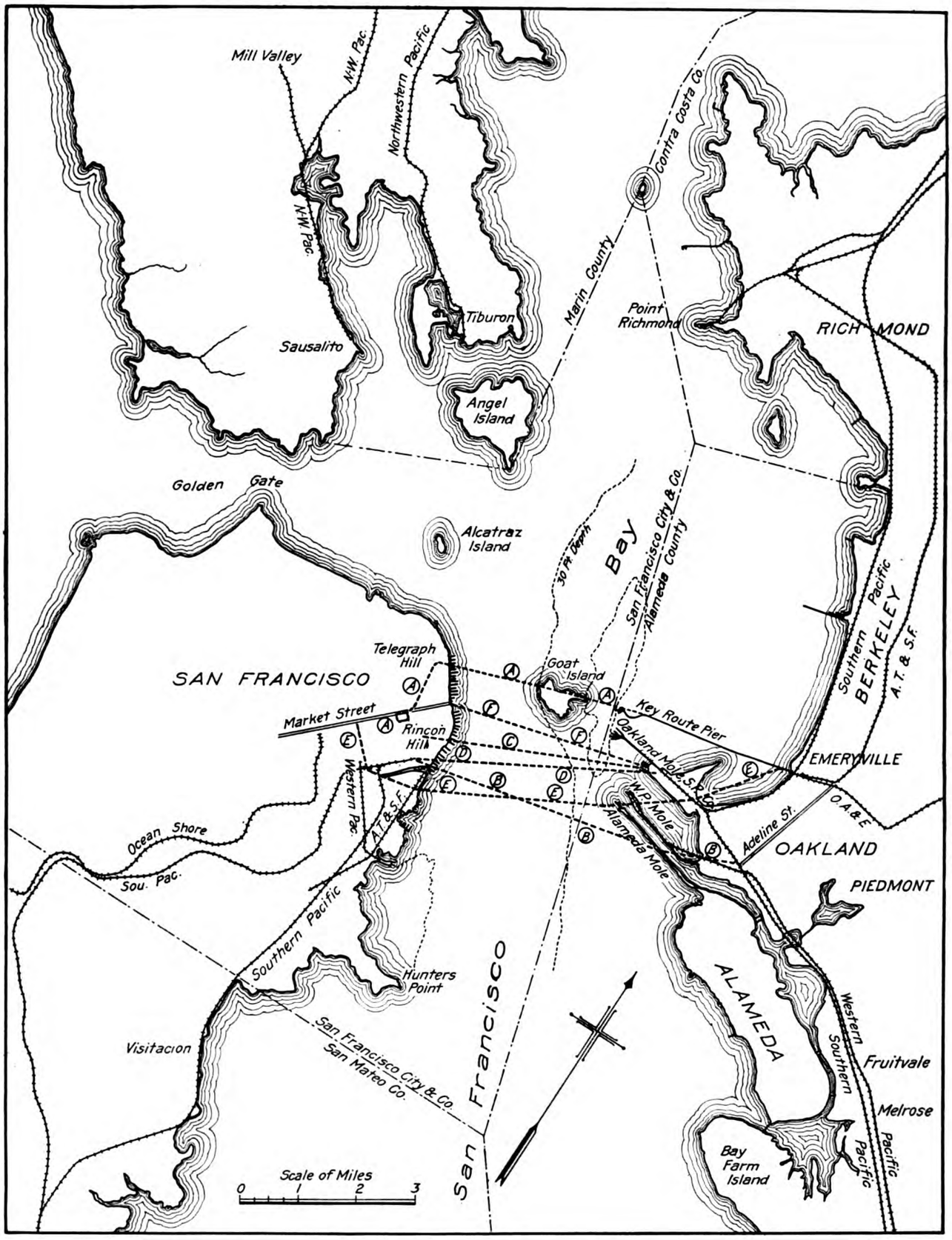

Map Of San Francisco Bay, Showing Location Of The Several Proposed Crossings

Ⓐ Fowler Bridge. Ⓒ Rush Bridge, Route No. 1. Ⓔ Reuter Tunnel.
Ⓑ Watson-Miller Bridge. Ⓓ Newman Tunnel. Ⓕ Aston Tunnel.

Generated on 2024-09-30 01:12 GMT / https://hdl.handle.net/2027/uiug.30112007838425
Public Domain, Google-digitized / http://www.hathitrust.org/access_use#pd-google
Digitized by Google
Original from UNIVERSITY OF ILLINOIS AT URBANA-CHAMPAIGN

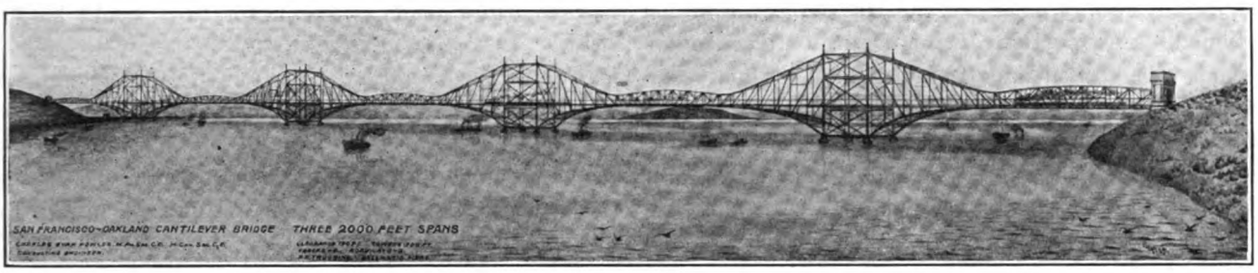

BRIDGE PROPOSED BY CHARLES EVAN FOWLER AND ASSOCIATES.

650-ft. cantilever arms and a 700-ft. suspended span. These spans would give a clearance of 150 ft., but this amount could be increased to 180 ft. or even 210 ft. for the centre span without increasing the grade to more than 1¼%. Four separate piers would be required at each bridge tower. From Goat Island trains would descend by a succession of comparatively short steel spans having a total length of 2900 ft., and a steel viaduct 7550 ft. long to the Key Route fill. The Key Route fill could be broadened to provide sufficient additional water-front to more than compensate for any interference with present plans for developing the Oakland water-front. There would be four railroad tracks and two 20-ft. roadways.

At the San Francisco side, there would be an elevated loop structure to the business and hotel centre, returning by way of Mission street. By this loop, through passengers could be taken to a terminal near their hotels, and commuters could leave the trains at convenient stations along the route. The gradient for the through trains could be as little as 1½%, that for the suburban trains as little as 2½%.

The estimated cost is as follows:

Terminals, San Francisco and Oakland	$ 4,500,000
Oakland fill and viaduct	7,700,000
Oakland spans	6,080,000
Goat Island crossing	150,000
San Francisco cantilever spans	48,870,000
Tracks for structure	400,000
Engineering and fixed charges	7,300,000
Total	$75,000,000

In presenting his project, Mr. Fowler called attention to the interference and danger, particularly in foggy weather, resulting from short-span bridges. He stated it to be his belief that, if permission for his proposed structure were granted, the construction of the bridge could be financed by forming a bridge corporation without the assistance of the municipalities. In both the construction and the operation of the bridge, it would be necessary to consider both it and the present transportation systems around the bay as a unit, and arrangements should be made with the transportation companies accordingly.

A. C. Rush of Los Angeles presented a plan for a suspension bridge with 2000-ft. spans and 180-ft. clearance. Three routes were suggested, all starting from Rincon hill on the San Francisco side. The terminus of route No. 1 is at the end of the Southern Pacific Oakland pier, that of route No. 2 about half-way between the end of Oakland pier and the shore, and that of No. 3 about half-way between the end of Alameda pier and the shore. The estimated cost of the bridge is $32,000,000.

A plan for a pontoon bridge was presented by Robert A. L. von Falkenburgh of Reno. One 528-ft. span with a vertical clearance of 140 to 180 ft. would be provided. Most of the rest of the spans would be 178 ft. The spans would rest on steel pontoons anchored by four cables.

Taggart Aston of San Francisco, and formerly connected with subaqeous tunnel construction in England, presented a plan for a double-tube tunnel from the Southern Pacific Oakland mole to the Ferry building at San Francisco. The top of the tunnel would be 43 to 46 ft. below low water. The approach grades on each side would be 2%. On the San Francisco side there would be a subway extending along Market street or else parallel to and one-half block south of Market street, to a Union terminal at Eighth street. Connections could be made there or along the route to other subway and surface lines. The length of the tunnel proper would be 15,480 ft. and of the two approaches, not counting the Market Street subway would be 11,370 ft. The tunnel proper would have a slight grade for drainage toward the middle, where there would be a shaft for ventilation and pumping.

The method proposed for constructing the tunnel is the 'trench and tremie' system used for the Detroit River tunnel. The estimated cost of construction of a double tube for the tunnel proper is $680 per lin. ft. The cost of approaches is estimated at $300 per ft. Allowing $350,000 for a ventilating shaft and ventilating and pumping equipment and $300,000 for stations, the total estimated cost of the project is $14,587,400. It would take 20 months to construct. The estimated cost for a double-track subway from the Ferry building to Eighth street is $2,080,000 in addition. In connection with these estimates, a table was presented of costs of various recent tunnel projects. These costs ranged from $228 per lin. ft. for the portion of the Detroit River tunnel that was driven in soft clay with a side shield and no compressed air to $390 per ft. for the Harlem River tunnel which was driven through sand and silt using the trench method with compressed air. The cost per cu. ft. of internal bore ranged from $0.61 for the Boston Harbor tunnel, using a roof shield and compressed air

Generated on 2024-09-30 01:12 GMT / https://hdl.handle.net/2027/uiug.30112007838425
Public Domain, Google-digitized / http://www.hathitrust.org/access_use#pd-google
Digitized by Google
Original from UNIVERSITY OF ILLINOIS AT URBANA-CHAMPAIGN

through stiff clay to $2.38 for the Harlem River tunnel mentioned. The portion of the Detroit River tunnel driven by the trench and tremie method without compressed air, the method proposed for the present case, cost $332 per lin. ft. and $1.05 per cu. ft. of internal bore.

An alternate plan was suggested for a tunnel having a top 75 ft. below low water. A shield and compressed air would be used in driving such a tunnel.

In presenting his plan, Mr. Aston called attention to the smaller amount of rise and fall for trains in the case of a tunnel than for a bridge sufficiently high to furnish a minimum of obstruction to navigation. This excess rise and fall for the bridge he placed at 80 ft. For a traffic amounting to 600 trains per day, the capitalized cost of this excess rise and fall would be $16,000,000. He submitted a table of cost of long-span bridges ranging from $2400 to $3000 per lin. ft. for several bridges actually constructed, and from $3200 to $13,500 per lin. ft. for some projected spans. Attention was called to the fact that there was much more danger of a bridge than a tunnel being destroyed or seriously injured in time of war. Because of the elasticity of the tunnel tubes he believed that there was no danger from earthquakes, while a bridge might easily be damaged. On account of temperature changes the track on a bridge is rougher than in a tunnel and the same rate of speed cannot be maintained. It was estimated that the time from 12th street and Broadway, Oakland to Second and Market streets, San Francisco, would be 11 minutes for a tunnel as against 19 minutes for a bridge.

No provision is made in the Aston plan for vehicular traffic. This, it is believed, can be handled satisfactorily by an improved ferry service. The construction of a light suspension highway bridge from Bay Farm island to Hunter's point at some future time is suggested. It is also assumed that the facilities for freight traffic are ample at the present time. Two additional tubes for railway tracks could be constructed when the increase of traffic warranted it. He stated that he represented persons who were preparing to raise funds for constructing such a tunnel.

Jerome Newman, formerly chief engineer for the California State Board of Harbor Commissioners, proposed a tunnel extending from Third and Townsend streets, San Francisco, to a point on the Southern Pacific Oakland mole about 700 ft. east of its western end. The length between portals would be $3\frac{5}{6}$ miles and the open cut approaches would require $\frac{1}{2}$ mile more, making the total length, surface to surface, $4\frac{1}{3}$ miles.

From the San Francisco side there would be a grade of 2% for 3850 ft., then a 0.266% grade for 3000 ft., bringing the top of the tunnel 50 ft. below low water. From this point there would be a level stretch for 6000 ft., then a rising 0.3% grade for 5000 ft., followed by a rising 1.4% grade for 5000 ft. to the surface on the Oakland side. There would five tubes, two for the electric suburban lines, two for the through rail lines, and one for vehicular traffic. The latter tube would be 20 ft. wide.

The tunnel would be of reinforced concrete, supported on a pile foundation. The partition walls between the tubes would be of steel columns, the intervening spaces being filled with concrete. There would be two large ventilating shafts, carried to a sufficient height to be above all waves.

In constructing the tunnel, a trench would be excavated by ordinary dredging methods. The tunnel would be constructed at the surface in short sections and sunk into place. The estimated cost of construction is $1094 per lin. ft. or a total of $25,000,000, and the estimated time is $3\frac{1}{2}$ years. This method has been used in the Detroit River and Harlem River tunnels.

In presenting his plan, Mr. Newman, besides discussing some of the advantages of a tunnel already brought out by Mr. Aston, stated that practically the entire waterfront of San Francisco north of pier No. 44 was now occupied and that further expansion must be south of this point. While no passenger traffic and only 9% of the freight traffic passed south of this point at the present time, it is only a question of a few years before this proportion will be greatly increased.

C. F. Reuter of San Francisco presented plans prepared by Leon M. Hall and Russell Dunn for a double-tube tunnel from a point on the San Francisco shore near the south side of China basin to a point near the end of the present Alameda pier. From this point, connecting lines are to run for the Alameda suburban trains, the Western Pacific trains, the Southern Pacific local and through trains now handled on the Oakland pier, and to the Key Route pier for the Santa Fe, Oakland, Antioch & Eastern, and Key Route trains. On the San Francisco side there would be a subway by way of Eighth street to a Union depot on Market street opposite the Civic Centre. The estimated cost of the tunnel proper is $15,500,000, and the total cost including terminals and connections with present rail lines is $33,000,000. No provision is made for vehicular traffic in this plan. Mr. Reuter stated that his associates were preparing to finance the proposed project.

A novel plan for a combined bridge and subway was presented by John G. Little of San Francisco. The proposed structure would extend from the foot of Fourth street, San Francisco, to the intersection of Adeline street, Oakland, produced, with Lincoln street, Alameda. Most of the structure would consist of either an earth fill or a reinforced concrete viaduct about 5 ft. above high water. The design would be similar to the viaduct constructed by the California State Highway Commission across Yolo basin, modified to suit the local conditions. At some point convenient for shipping, the viaduct would be broken and a tunnel of sufficient length substituted. The length of tunnel suggested was 2000 ft., but this could be changed without making any material difference in the plans. Provision would be made for both rail and vehicular traffic. He estimated the total cost of the structure to be $15,000,000, $10,000,000 of which could

Generated on 2024-09-30 01:15 GMT / https://hdl.handle.net/2027/uiug.30112007838425
Public Domain, Google-digitized / http://www.hathitrust.org/access_use#pd-google
Digitized by Google
Original from UNIVERSITY OF ILLINOIS AT URBANA-CHAMPAIGN

be raised by an issue of State harbor bonds, and the remaining $5,000,000 by the counties of San Francisco and Alameda. Interest and a sinking fund for the harbor bonds would be provided from the rent charged the railroad companies for the use of the structure. An objection to this plan was raised by the board of engineers, who suggested that the tubes at each end of the proposed tunnel by which the transition would be made to the bridge would decrease the tidal cross-section and seriously affect the tidal currents near the bridge.

P. J. Gildea of San Francisco presented plans for a tunnel similar to that proposed in the Aston and Reuter plans. He estimated the cost of the structure at $11,000,000.

The proponents of both bridge and tunnel plans admitted frankly that plans for structures and estimates of cost are both merely tentative until a complete set of borings is made of the bottom along the various proposed crossings. The tunnel partisans, however, claimed that uncertainty regarding foundations affected the accuracy of bridge estimates more than it did that of the tunnel estimates. The tunnel partisans also pointed out that while an additional tube or tubes can be driven whenever increased traffic demands it, the capacity of a bridge cannot be materially increased without practically duplicating the structure.

The question of raising funds for a complete survey of foundation conditions was raised by E. L. Van der Naillen of Oakland, who asked if it would be possible to obtain a Federal appropriation for this purpose. The members of the board of engineers did not encourage this idea. The bridge partisans, in particular, expressed the hope that as a result of these hearings, a statement might be obtained from the War Department regarding the approximate clearances and spans that would be required by the Federal Government. Major Pillsbury suggested that this might be difficult to obtain until more definite data were obtained regarding foundation conditions.

A number of persons not directly interested in any of the proposed plans took part in the discussion. The most important suggestions were made by J. J. Dwyer, chairman of the State Board of Harbor Commissioners, and Robert Dollar, a prominent ship-owner. Mr. Dwyer proposed that if the Watson-Miller plan should be adopted, the San Francisco terminus should be on the south side of China basin instead of the north side. This would make but little difference in the structure itself, but would place it below a considerable length of water-front as well as facilitating traffic to various parts of the city by way of Sixteenth street produced. He favored a bridge without a draw-span if it was financially practicable. Mr. Dollar expressed the opinion that any of the proposed bridges would be less of a hindrance to main-line navigation than the present ferry-boats. He was willing, if necessary, to accept even a bridge with a draw-span for the largest vessels, such a span to be kept closed during the rush hours. Practically all those taking part in the discussion agreed that some improvement in traffic conditions whether by a bridge or tunnel, is desirable, if found to be financially practicable. Because of the delays certain to occur during the preparation of complete engineering and financial plans, and the time necessary for the construction itself, there was a general agreement that it will be necessary to commence preliminary plans in the near future if the structure is to be completed within the next ten years.

STATISTICS OF LUMBER PRODUCTION FOR 1915

The lumber cut of the nation by species is given in a report recently issued by the National Forest Service. The accompanying table gives the incomplete reported cut of each principal species and the probable total cut of each. The reported cut of lath in 1915 was 2,745,134,000 and is estimated that the total cut was 3,250,000,000. The reported cut of shingles was 8,459,378,000 and the estimated total cut, 9,500,000,000. The average value of each principal kind of lumber reported by the mills is also given. The figures are approximate, but are based on the data reported by mills in the principal States producing each kind of lumber, and are therefore close to the final averages.

Kind of wood.	Probable total M ft.	Reported M ft.	Value per M
Yellow pine	14,700,000	12,177,335	$12.50
Douglas fir	4,431,249	4,121,897	10.50
Oak	2,970,000	2,070,444	19.00
White pine	2,700,000	2,291,480	18.00
Hemlock	2,275,000	2,026,460	13.00
Spruce	1,400,000	1,193,985	16.50
Western pine	1,293,985	1,252,244	14.50
Cypress	1,100,000	926,758	20.00
Maple	900,000	771,223	15.00
Red gum	655,000	478,099	12.50
Chestnut	490,000	399,473	16.00
Yellow poplar	464,000	377,386	22.50
Redwood	420,294	418,824	13.50
Cedar	420,000	352,482	15.50
Birch	415,000	355,328	16.50
Larch	375,000	348,428	11.00
Beech	360,000	303,835	14.00
Basswood	260,000	207,607	19.00
Elm	210,000	177,748	17.00
Ash	190,000	159,910	22.50
Cottonwood	180,000	138,282	17.50
Tupelo	170,000	153,001	12.00
White fir	125,048	121,653	11.00
Sugar pine	117,701	115,109	.....
Hickory	100,000	86,015	23.50
Balsam fir	100,000	71,358	14.00
Walnut	90,000	65,144	.....
Lodgepole pine	26,486	22,672	13.00
Sycamore	25,000	19,729	14.00
All other kinds	49,531	37,826	.....
Total	37,013,294	31,241,734	

Blasting with 40% dynamite was employed to remove 93 ft. of reinforced concrete wall, 8½ ft. high and 3½ ft. wide, inside a power-house. Only very small charges were used, 98 shots in all, in order not to injure the other walls and the boilers.

Generated on 2024-09-30 01:16 GMT / https://hdl.handle.net/2027/uiug.30112007838425
Public Domain, Google-digitized / http://www.hathitrust.org/access_use#pd-google
Digitized by Google
Original from UNIVERSITY OF ILLINOIS AT URBANA-CHAMPAIGN

The Oregon Water Code and Benefits Through State Administration of Streams*

By JOHN H. LEWIS †

Oregon's experience in the administration of its water resources should be of value to the State of Washington, in considering the enactment of similar legislation. It will be my purpose to present to you some of the advantages of the Oregon system of water titles, based upon eleven years' experience as state engineer, seven of which have been devoted largely to the administration of this system of water laws. The Oregon water-code has given general satisfaction to irrigation and water-power interests, also to promoters of new enterprises, and to the public generally.

A vast majority of the irrigators are pleased with this law for the reason that as soon as their water rights have been determined and recorded, a water-master with police power is placed in each district to distribute the water. Injunction suits with their inevitable delays and great expense are no longer necessary to prevent a few 'water-hogs' from stealing their neighbors' water. Difficulties in distribution can now be promptly adjusted. But few arrests have been made so far. These, however, have been sufficient to cause water users to respect property rights in water, just as they would any other class of property rights.

No objections to this law have been urged by the water-power companies. From the fact that these interests have been urging State control in preference to Federal control, and pointing to the Oregon law as a model, with its limitation of franchises to forty years, it may be assumed that it is satisfactory to them.

It has also given satisfaction to the promoters of new enterprises, for the reason that it is now possible to find all available information as to water-supply and vested rights at one central office. If it appears from these records that surplus water is available for new projects, a definite, simple, and inexpensive plan is provided for initiating new rights to such water. Protection of the State is granted during the progress of surveys, also during the construction and development periods, and during the subsequent period when the water is being gradually applied to beneficial use. Ultimately a water-right certificate, or deed, is issued by the State for only such amount of water as has been actually applied to beneficial use.

The public generally is satisfied with this law. It has added value to existing water rights through security of title, and freedom from long and expensive litigation. It has stimulated development. It has discouraged the barter and sale of water by speculators apart from the use, and has prevented the monopolization of unused waters by legal obstructionists, or by persons purchasing worthless lands bordering streams. It has also given particular satisfaction to those interested in the highest development of our State, for the reason that there is a special tribunal to represent the State in all water-right determinations. The public is now taking a growing interest in its unused water-supplies. The greater the amount of surplus water, the greater the prospects for bringing new capital into Oregon, and increasing the taxable wealth. No longer will the solemn spectacle be endured of a court being compelled to divide up public streams among several litigants who happen to be parties to a suit, without regard to the rights of others on the same stream, or to the rights of prospective appropriators. Nor will the new appropriator be permitted to claim an unreasonably large amount of such surplus water. There is now a public official with power to limit his appropriation to an amount which he can reasonably put to beneficial use, or to deny the application in whole or in part, if it conflicts with existing rights, or is a menace to the safety or the welfare of the public. In the arid West, a State water department to dispose of State waters is more important than a State land department.

During six years' operation of the water code, over 400,000 acres of irrigated land, or two-thirds of the irrigated area of the State, was surveyed as a basis for water-right adjudications. Of this amount, the rights of only 1615 claimants, involving 214,000 acres were completely adjudicated at the time of the last report. The average cost to each claimant in fees paid to the State was from $3 to $16. Several large adjudications have been completed since that time, so that Oregon's record of existing rights to the use of water has been nearly completed. To have settled these rights in the courts would have cost an enormous sum, and taken an indefinite period. All the results conform to a definite preconceived system and will soon be published in tabular form by stream systems for convenience of the public. All new rights initiated under this law are just as definitely determined and recorded. Over 2752 permits have been approved where the estimated cost of the proposed works amount to $62,000,000. The fees paid the State in connection with the granting of such permits amount to over $70,000, or more than the cost of this branch of the work to the State.

The Oregon law, however, has its enemies. The great cattle corporations, which have controlled the ranges of

*Address delivered at the Water-Code Conference, held at Tacoma, Washington, July 11, 1916.

†State engineer, Salem, Oregon.

Generated on 2024-09-30 01:12 GMT / https://hdl.handle.net/2027/uiug.30112007838425
Public Domain, Google-digitized / http://www.hathitrust.org/access_use#pd-google
Digitized by Google
Original from UNIVERSITY OF ILLINOIS AT URBANA-CHAMPAIGN

eastern Oregon for years through the purchase and fencing of a narrow strip of land along the rivers, or through the fencing of water-holes in the great semi-arid districts, have thrown every possible obstacle in the path of the administrative officials, in the hope of having the law declared unconstitutional and void. Several of California's most powerful cattle corporations having lands in Oregon, have carried appeals to the various State and Federal courts. One of these cases, the Pacific Live Stock Co. *v.* Lewis, was carried to the Supreme Court of the United States. As the principles upon which this law was founded had never been passed upon by this tribunal, there was some doubt as to its constitutionality, until the decision of the Court in the above entitled case on June 5, 1916, wherein the law was sustained at every point.

The status of this law has been thoroughly established and few, if any, more cases are expected to be appealed to the courts on questions of law. It has been definitely settled that a State may create by law suitable officers or boards to administer its water resources, just as it may create public-service commissions to control railway and other corporations. While the duties of such officers are primarily administrative in character, the court holds such officers have quasi-judicial powers, and that under the Oregon law, the Water Board of the State may be represented by counsel on appeal to the courts. One of the most important points settled by this decree is the right of the State Engineer to make surveys, gather data and information, and make an independent impartial report as to water supply and duty of water. This makes it unnecessary to take thousands of pages of testimony and attempt to arrive at the truth from biased testimony submitted by the various contending parties.

The Water Code declares waters within the State from all sources of supply to be the property of the public. Definite administrative machinery is provided to regulate the use of this property in the interest of the public, and for the protection of vested rights. This regulation is possible under the police power of the State. A Board of which the State Engineer is chairman is created to have charge of this property.

It is the duty of the Board:

(1) To ascertain and record all rights to the use of this public property that had become vested prior to the adoption of the law.

(2) To grant rights, for beneficial use in the State's unappropriated waters, to those who make proper application, and

(3) To protect recorded rights to the use of public waters by regulating diversions for streams.

In addition to these three primary objects, funds were provided for the measurement of streams and the making of topographic maps, so that we might know the total amount of water available in our streams at different seasons of the year, and ascertain how much of this water was unused and could be diverted for irrigation and other projects. The U. S. Geological Survey and the State share equally in the cost of this work.

In 1915, $65,000 was appropriated by the State and an equal amount by the U. S. Reclamation Service to prepare plans and estimates of cost for the construction of a number of large irrigation and water-power projects, so that the people in the various districts might have conservative figures as to the cost of bringing water to their lands, or transmitting power from neighboring streams. Co-operative surveys have thus been made for 12 projects involving 795,000 acres. The estimated cost of these projects is $42,000,000, or $55 per acre.

While the adoption of a modern water-law should stimulate development of the State's water resources by virtue of the certainty of its provisions, yet positive and lasting results should not be expected for a number of years. It will take from two to ten years to make sufficient headway in the measurement of streams, and the determination of existing water rights, to accumulate sufficient data to justify capital in making large-scale development on many streams where the water is now partly utilized. Nevertheless, because of this consistent water-policy, there is probably more irrigation activity in Oregon at the present time than in any other State of the Union.

Notwithstanding adverse financial conditions, five irrigation districts have recently been organized, with conservative plans and estimates of cost having the approval of the State and the United States.

The State of Washington has enormous undeveloped water resources. Much of the State is arid or semi-arid in character. The climate is ideal for irrigation and the mountainous sections afford innumerable opportunities for water-power development. For the protection of existing rights to the use of water, and to encourage the development and use of these vast water resources, which are now the property of the public, a definite State water policy must be established in the near future. The sooner this is done the easier will be the task.

The State is to be congratulated upon having a number of citizens who appreciate the great importance of this matter to the public welfare. They have contributed much time and effort to an educational campaign which has resulted in this Water-Code Conference. Largely through their efforts, a suggested draft of a law has been prepared. I have examined this draft and find it superior to the Oregon code in some respects. To my mind, the fixing of responsibility on a single officer, instead of a board, will promote economy, efficiency, and speed in this work. With a board, where the responsibility for failure or extravagance can be easily shifted to other members, or where it is impossible to secure proper credit for unusual effort, there is no particular incentive for faithful or efficient service. There is no danger from this concentration of authority such as there would be if the decisions of this single officer were final. Several opportunities for appeals to the courts are available before the final decree is entered.

Work should begin upon those streams which are most used. In this way, the complicated legal questions of appropriation versus riparian rights will not be serious, as

Generated on 2024-09-30 01:11 GMT / https://hdl.handle.net/2027/uiug.30112007838425
Public Domain, Google-digitized / http://www.hathitrust.org/access_use#pd-google
Digitized by Google
Original from UNIVERSITY OF ILLINOIS AT URBANA-CHAMPAIGN

practically all will be appropriators. The common-law doctrine of riparian rights, which is most strongly entrenched in the humid portion of the State, is now in a state of flux. A departure from the strict common law has been made in recent years, and the courts are now leaning more and more to the doctrine of appropriation and use. Legislators are gradually coming to the conclusion that it would be fatal to attempt to harmonize these two doctrines in any statute. For it is manifestly impossible to enact that all streams shall flow undiminished and unpolluted to the ocean, and at the same time permit diversions for beneficial use. It would be extremely unfortunate if the legislature should attempt to define a riparian right at this time. Only the merest shadow of this early doctrine remains to haunt appropriators, and it is believed that no difficulty will be experienced by the administrative officers and the courts in dealing with the situation in each case as it arises. This has been the experience in Oregon.

Oregon, Washington, and Idaho, comprising practically the entire Columbia River drainage basin, should have substantially uniform water-laws. Later, perhaps, some Federal interstate legislation can be secured, so that this stream may be treated as a unit, for administrative purposes, from its source to its mouth. We have many navigation, irrigation, and water-power projects that are interstate in character. The construction of these will be of inestimable value to the Northwest. Some workable plan should be devised in the near future for closer co-operation of these States with the National Government for the construction of these enormous interstate projects.

MAP OF CHANNEL IMPROVEMENTS NOW UNDER CONSTRUCTION ON SACRAMENTO RIVER.

The accompanying map, taken from the annual report of the California State Reclamation Board, shows the work now being done on the Sacramento river between Rio Vista and Collinsville by the Federal Government with the co-operation of the State of California. This is the narrowest portion of the lower river and the dredging now being done has been described as an 'uncorking' operation. This channel improvement not only affects flood conditions on the Sacramento river, but also keeps flood-waters from that stream from backing up into the San Joaquin river.

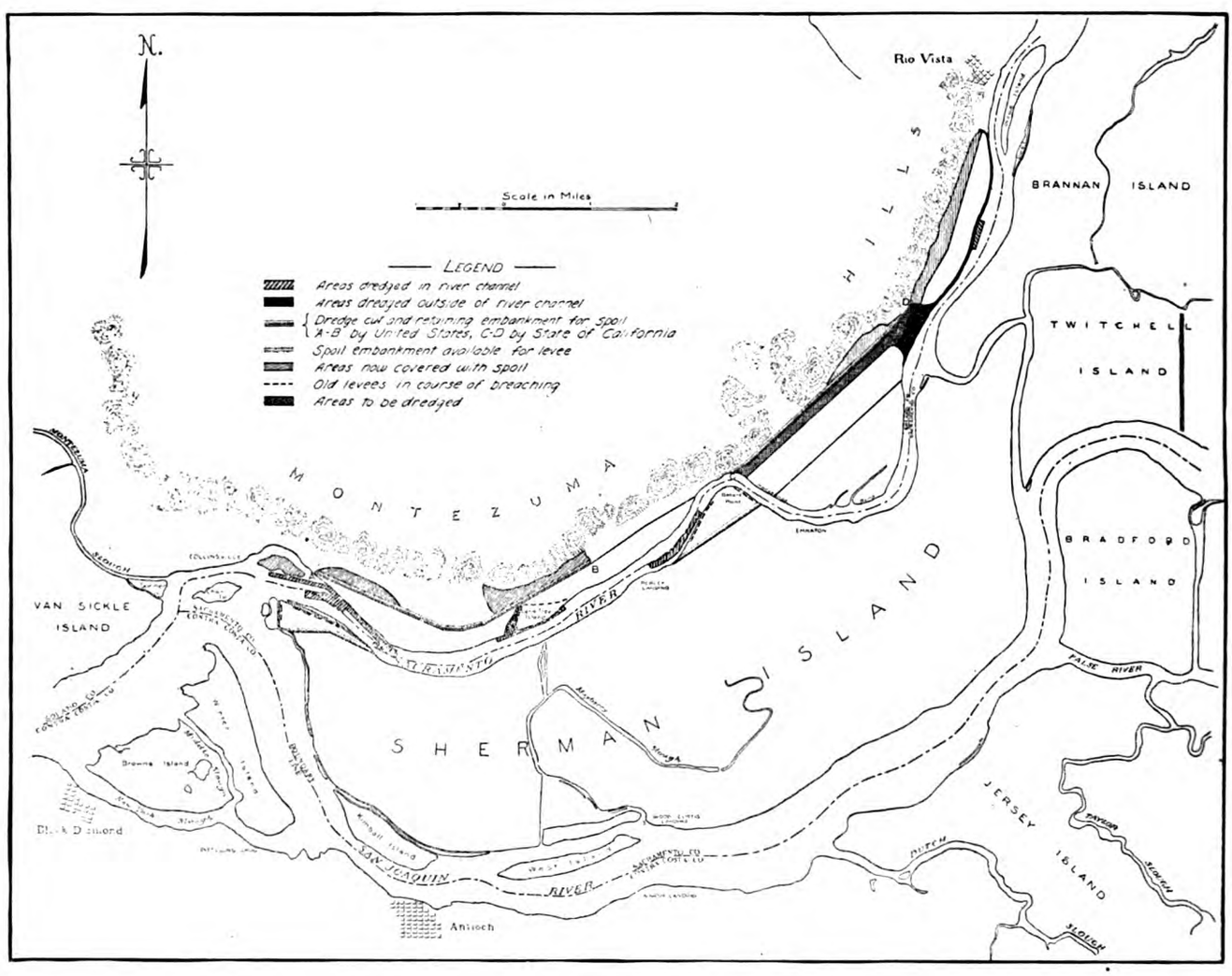

Generated on 2024-09-30 01:15 GMT / https://hdl.handle.net/2027/uiug.30112007838425
Public Domain, Google-digitized / http://www.hathitrust.org/access_use#pd-google
Digitized by Google
Original from UNIVERSITY OF ILLINOIS AT URBANA-CHAMPAIGN

Timber Framing—Part IV

By HENRY D. DEWELL*

Details of Timber Trusses

The timber truss, with its details of joints, forms perhaps, the most important and interesting subject of timber design. A roof truss of the Howe type is the simplest form of truss, as far as the calculation of stresses is concerned. Consequently we find in practice that the main sections of such roof trusses are usually of the proper size, but that the details, particularly the end joints, are often quite deficient in strength to develop the calculated stresses. Thus the truss that the designer imagined confidently had a large safety factor, may actually be not far from failure. The live load used in the design is in many instances the saving factor of the truss.

It is not the intention in what follows to treat of the solution of stress diagrams in roof trusses. In such mathematical discussion of primary or secondary stresses as is given, the reader's knowledge of the derivation and the proper application of the different formulae used, is assumed. In other words, it is taken for granted that he has a working knowledge of structural mechanics. It is proposed to discuss the different details of a typical roof truss from the standpoint of both theoretical and practical efficiency.

End Joints

The number of types of end joints that may be used might almost be said to be legion, and no attempt will be made to list or describe them all. No one type can be specified that will be applicable to all trusses. The individual case must govern the selection. For example, a roof truss that rests upon a masonry wall will usually require an altogether different type of end joint from a truss which frames into a post. The consideration of clearance may decide whether a shoe is necessary, or whether the batter post of the truss may simply dap into the lower chord and be bolted thereto. Certain simple end-details can be used only with trusses of small chord-stresses. Again, the consideration of wind action in a truss which is a unit of a portal frame may involve the necessity of an end bolster, with carefully detailed connection to post, truss-chord and knee-brace.

There are, however, a few types of end joints which have marked superiority, both from directness of action of the stresses, and from simplicity and ease of fabrication and framing. The cardinal principle may be set down as a basis for design of all end joints, that the complete thrust of the batter post should be taken by one line of action alone. To illustrate, a joint should never be framed so that the thrust is taken partly by lugs dapped into the lower chord, and partly by an inclined bolt. Tests† have demonstrated conclusively that the two systems will not act together, and that either the lugs or the bolt will take the whole stress up to the commencement of failure, before the other system will come into action.

In the following paragraphs, eight types of end joints are detailed and cost estimates of six are given. In order that a comparison of these different details may be made upon the same basis, a typical truss known as the English roof truss has been chosen. The span is 70 ft., the distance between trusses is 24 ft., and the load has been assumed at 40 lb. per sq. ft. of horizontal projection. Of this total load, 13.5 lb. per sq. ft. has been considered as acting at the lower-chord panel-points, being made up of one-half the weight of the truss plus the weight of the ceiling. The skeleton diagram of the truss, together with the stress diagram is shown on Plate VII. The stresses in the various members are indicated on the left half of the truss, while the required sizes are marked on the right half.

The following working stresses have been used in designing the details.

Timber	Lb. per sq. in.
Tension on net section	1,500
Compression, end-bearing	1,600
Compression, cross-bearing	285
Shear, longitudinal	150
Steel	
Tension	16,000
Shear	10,000
Bearing	20,000
	Lb. each
¾-in lag screw in steel plate	1,030
⅞-in. lag screw in steel plate	1,200

All computations incident to the design are given, so that the method may be followed by the reader. For the sake of simplicity, it is assumed that the truss in all cases rests upon a masonry wall, although no details of support are shown. It is also assumed that the centre line of support passes through the intersection of the centre lines of the chords.

Types A and B. Where the clearances, relative inclination of upper chord to lower chord, and the magnitude of the stresses will permit, the simplest and cheapest details for end joints are those represented by Types A and B, shown in Fig. 20 and 21.

*Consulting engineer, Holbrook Bdg., San Francisco, formerly Chief Structural Engineer, Panama-Pacific International Exposition.

†*Engineering Record*, Vol. 42, November 17, 1900. This article by F. E. Kidder shows full size end joints after failure, and discusses the tests. The article is summarized and the illustrations reproduced in 'Jacoby's Structural Details,' pages 274-276. Jacoby also discusses other tests of end joints.

Generated on 2024-09-30 01:11 GMT / https://hdl.handle.net/2027/uiug.30112007838425
Public Domain, Google-digitized / http://www.hathitrust.org/access_use#pd-google
Digitized by Google
Original from UNIVERSITY OF ILLINOIS AT URBANA-CHAMPAIGN

In these two details, the thrust of the upper chord is taken completely by bearing and shear on the lower chord. As shown by the detail computations, the required length of the uncut portion of the chord for shear is 41 in. The inclined bolts in both details take no calculable stress. In Type A, the length of the cut d is determined from the curves of Fig. 3 and 4 of an earlier article, which give the allowable pressures on surfaces inclined to the direction of the fibres. On examining these curves, it is evident that if the pressures shown by the curve of Fig. 4 be used, this type of detail must be abandoned, unless the sections of chords are materially increased, as the required cuts in the chord

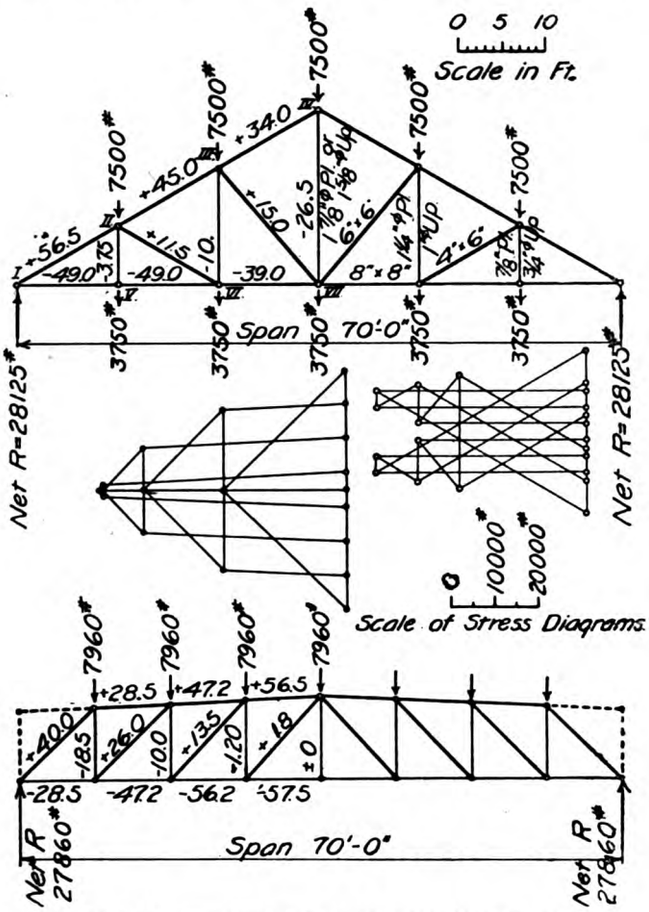

PLATE VII. SKELETON AND STRESS DIAGRAMS OF TRUSS.

will be too deep. If, however, the safe bearing pressure be taken in accordance with the curve of Fig. 3, the required depth of toe-cut is 5 in. measured on the normal face of the strut. This leaves an uncut portion of the chord with an effective area of $4\frac{1}{4}$ in. $\times$ 10 in. = 42.5 sq. in. The average tensile stress on this section is then $\frac{49,000}{42.5} = 1200$ lb. per sq. in. With the centre lines of truss members and end support intersecting in a point, as assumed in finding the stresses in the truss members, there will be excessive secondary bending due to the couple of the horizontal component of the thrust of the upper chord and the resultant tension in the lower chord, the latter acting at one-half the uncut depth of the lower chord. The moment of such couple in Fig. 20 is 49,000 lb. $\times$ 4 in. = 196,000 in. lb. To overcome this moment, which would stress the chord to failure, the line of action of the reaction of the truss, or the centre line of support, must be placed at such a distance to the left of the intersection of the centre lines of the chords, that the couple formed by the reaction of the truss and the resultant of the vertical thrust of the upper chord on the lower chord will equal the moment of the first couple. It has been assumed that the thrust of the upper chord is uniformly distributed over its toe. Consequently the vertical component of this thrust will also be uniformly distributed over the same area.‡ In this case the vertical component of the thrust happens to coincide in position with the line of the truss reaction. Therefore the line of action of the truss reaction must be placed $\frac{196,000}{28,125}$ = 7 in. to the left of the centre of the toe, or 7 in. to the left of the intersection of the truss members.

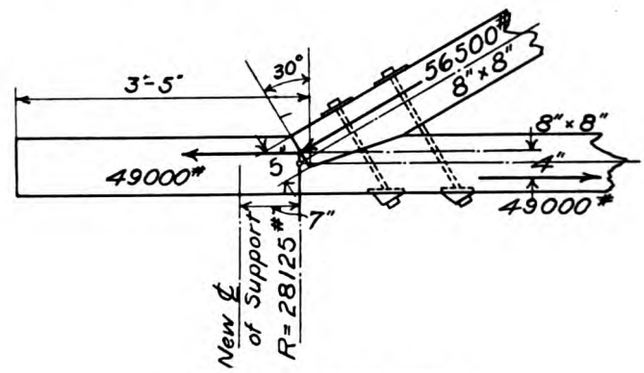

FIG. 20. END JOINT, TYPE A.

COMPUTATIONS

Depth of toe:

$\theta = 60°$, therefore $n = 1400$ lb. per sq. in., from Fig. 3, Part II.

Required area in bearing $= \frac{56,500}{1400} = 40$ sq. in.

Required depth $= \frac{40}{8} = 5$ in.

Length of chord projection for shear:

$\frac{49,000}{150 \times 8} = 41$ in. = 3 ft. 5 in.

In Type B, the cuts of the upper chord are so modified that neither of the two surfaces are normal to the centre line of the chord. Consequently, each surface will take a component of the total stress. The angle between the two bearing surfaces may of course vary;

‡It is obvious that with a normal cut on the upper chord, as in this detail, the whole thrust of the upper chord must be taken on the toe of the post, and that the inclined cut can take no pressure. The assumption of a uniformly distributed pressure over the toe of the upper chord requires that there exist another component of the stress in the chord which is normal to its centre line, otherwise the joint cannot be in equilibrium. This component is small, and will be resisted either by friction of the toe on the cut in the lower chord, or by tension in the bolts. In effect, such assumed distribution of forces assumes that the direction of stress in the upper chord is inclined slightly to the centre line of the chord, and is coincident with a line drawn between the centres of the normal cuts at the two ends.

Generated on 2024-09-30 01:21 GMT / https://hdl.handle.net/2027/uiug.30112007838425
Public Domain, Google-digitized / http://www.hathitrust.org/access_use#pd-google
Digitized by Google
Original from UNIVERSITY OF ILLINOIS AT URBANA-CHAMPAIGN

in this case it has been made 90°. Computations made to determine the depth of cut in the lower chord, which are shown in detail in Fig. 21, indicate that this depth must be $4\frac{1}{8}$ in. This distance determines the length of the other surface, which is found to be more than sufficient for its component of pressure. There then remains to be determined the position of the centre line of support, so that no secondary bending will exist in the lower chord. For this condition, the moment of all forces acting on the lower chord must equal zero. Each normal component of stress on the two bearing surfaces of the upper chord is resolved into its horizontal and vertical components. The product of the resultant of these horizontal forces by the distance between such resultant and the centre line of the uncut portion of the lower chord is 49,000 lb. $\times$ $3\frac{3}{4}$ in. = 183,500 in. lb. The resultant of the two vertical components of the normal pressures is found to lie at a distance of $3\frac{1}{2}$ in. to the left of the reaction. The new centre line of support must therefore be placed at a distance to the left of this point such that the product of the vertical reaction by this distance will equal the moment of 183,500 in. lb. found above. This length is $6\frac{1}{2}$ in., so the new centre line of support must lie 3 in. to the left of the intersection of the centre lines of the upper and lower chords. The long projection of the lower chord beyond the point of intersection of its centre line with that of the upper chord makes it extremely improbable that the Types A and B end joints could be used in an actual case. Undoubtedly some form of shoe would be found necessary.

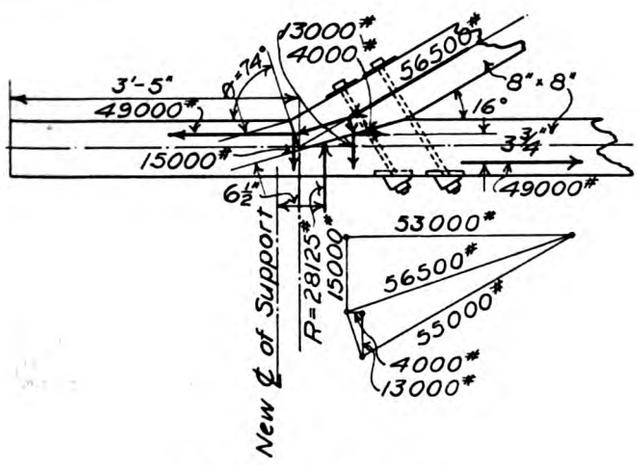

FIG. 21. END JOINT, TYPE B.

COMPUTATIONS

Depth of toe:

$\theta = 74°$, therefore $n = 1680$ lb. per sq. in., from Fig. 3, Part II.

Required area in bearing $= \frac{56,500}{1680} = 32.8$ sq. in.

Required depth $= \frac{32.8}{8} = 4.1$ in.

Pressure on inclined bed:

$\theta = 16°$, therefore $n = 400$ lb. per sq. in.

Required area in bearing $= \frac{13,000}{400} = 32.1$ sq. in.

Actual area = 16 in. $\times$ 8 in. = 120 sq. in.

Types C and D. Types C and D, shown in Fig. 22 and 23, are comparable to the common end-detail of a steel truss, in which the two chords deliver their stresses into a common gusset plate. This is particularly true for Type D. In Type C, each stress is completely taken in bearing by the steel tables riveted to

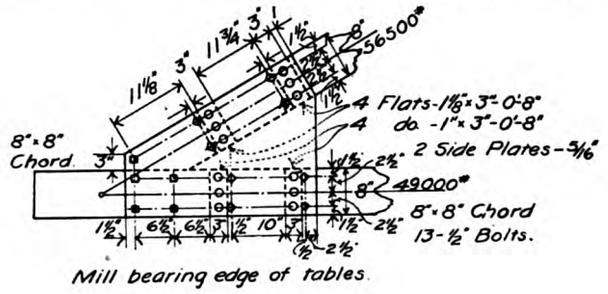

FIG. 22. END JOINT, TYPE C.

COMPUTATIONS

Bearing area of tables for upper chord $= \frac{56,500}{1600} = 35.3$ sq. in.

Assuming two tables each side of chord, depth of table $= \frac{35.30}{4 \times 8}$ $= 1.103$ in. $= 1\frac{1}{8}$ in.

Rivets required in each table $= \frac{56,500}{4 \times 4420}$ = three $\frac{3}{4}$-in. rivets.

Thickness of side plates for bearing against rivets $= \frac{5}{16}$ in.

Shearing area required for each table $= \frac{56,500}{4 \times 150} = 94.2$ sq. in.

Distance required between tables $= \frac{94.2}{8} = 11.75$ in. $= 11\frac{3}{4}$ in.

Treating side plates as columns, $r = 0.0903$. $L/r = \frac{11.75}{0.0903}$ $= 130$.

Moment of rotation on each table $= \frac{56,500}{4} \times \frac{1}{2}(1.125 + 0.3125)$ $= 10,130$ pound-inches.

Stress in bolts $= \frac{10,130}{2 \times 3.5} = 1450$ lb. Use two $\frac{1}{2}$-in bolts for each table.

Bearing area of tables for lower chord $= \frac{49,000}{1600} = 30.6$ sq. in.

Assuming two tables each side of chord, depth of tables $= \frac{30.6}{4 \times 8}$ $= 0.955$. Use 1 in.

Rivets required in each table $= \frac{49,000}{4 \times 4420}$ = three $\frac{3}{4}$-in. rivets.

Shearing area required for each table $= \frac{49,000}{4 \times 150} = 81.6$ sq. in.

Distance required between tables $= \frac{81.6}{8} = 10.2$ in. Use 10-in. bolts as for upper chord.

Area between last table in upper chord and end of upper chord greater than minimum area of 94.2 sq. in.

Net section of lower chord $= (8-2)\ (8-1) = 42$ sq. in.

Unit stress in lower chord $= \frac{49,000}{42} = 1170$ lb. per sq. in.

BILL OF MATERIAL FOR ONE END-CONNECTION

	Pounds
Two $\frac{5}{16}$-in plates with area of 9.2 sq. ft., at 12.72 lb.	117.4
Four flats, $1\frac{1}{8}$ by 3 by 8 in., at 7.65 lb.	30.6
Four flats, 1 by 3 by 8 in., at 6.80 lb.	27.2
Twenty-four rivet heads at 0.136 lb.	3.3
Thirteen bolts, $\frac{1}{2}$ by 9 in., at 0.65 lb.	8.5
Total weight of steel	187.0

COST OF ONE END-CONNECTION

187 lb. steel at $0.04 ..... $7.48

Generated on 2024-09-30 01:19 GMT / https://hdl.handle.net/2027/uiug.30112007838425
Public Domain, Google-digitized / http://www.hathitrust.org/access_use#pd-google
Digitized by Google
Original from UNIVERSITY OF ILLINOIS AT URBANA-CHAMPAIGN

the side plates. As will be seen by the detailed computations, the thickness of the tables is a factor of the capacity of the timber in end bearing. A sufficient distance between tables must be given to provide the necessary shearing area; bolts must be provided to hold the tables in their notches; the side plates must be thick enough, acting as columns between the lines of bolts, to take the largest stress; and last, each table must have enough rivets to hold its individual portion of the total stress.

In principle, this type of end joint is perfect. There is no eccentricity of the principal stresses, and consequently no secondary stresses. As a type of end detail from the standpoint of field work, the joint is not so good. It will be found practically impossible to cut and fit the notches for the tables with sufficient accuracy so that each table will take equal and uniform bearing. Moreover, any deficiency in bearing will be extremely difficult, if not impossible, to remedy by shimming or similar methods, on account of inaccessibility after the side plates are bolted to the timber. The joint is not susceptible to field examination for defects, and this is perhaps its worst feature.

Fig. 23 (Type D) shows a modification of Type C, in which the steel tables are abandoned, and the chord and batter-post stresses are transmitted to the gusset plates by means of lag screws acting in shear. Except for the consideration of economy, this joint has all the advantages of Type C, and none of its disadvantages. All stresses are concentric, and with good inspection

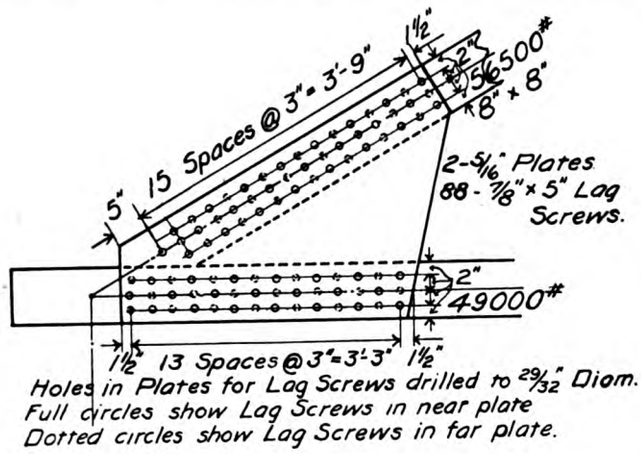

FIG. 23. END JOINT, TYPE D.

COMPUTATIONS

Number of lag screws in upper chord $= \frac{56,500}{1200} = 47.$

Number of lag screws in lower chord $= \frac{49,000}{1200} = 41.$

Thickness of plate $= \frac{5}{16}$ in.

BILL OF MATERIAL

	Pounds
Eighty-eight $\frac{7}{8}$ by 5-in. lag screws at 0.95 lb	82.6
Two $\frac{5}{16}$-in. plates with area of 15.4 sq. ft. at 12.75 lb	196.5
Total weight of steel	279.1

COST OF ONE END-CONNECTION

279.1 lb. steel at $0.04 ..... $11.16

during construction, one may rely on a close fit of the lag screws in the timber. The holes in the steel plates for the lag screws are drilled to a diameter of $\frac{1}{32}$ in. greater than the diameter of the shank of the lag screw;

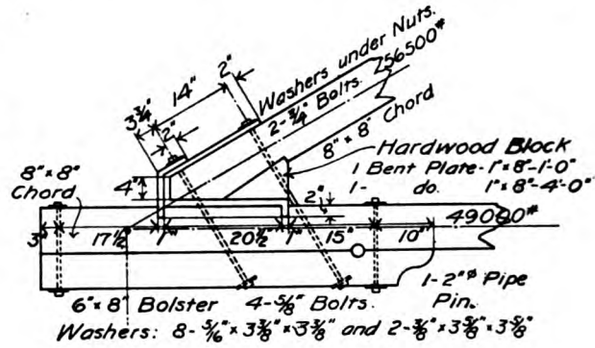

FIG. 24. END JOINT, TYPE E.

COMPUTATIONS

Area required for bearing between upper and lower chord $= \frac{28,125}{285} = 99$ sq. in.

Depth of lugs $= \frac{49,000}{2 \times 1600 \times 8} = 1.915$ in. Use 2-in. lugs.

Thickness of lugs for bending:

Bending moment one lug $= 24,500$ lb. $\times 1\frac{1}{2} = 36,750$ pound-inches.

Thickness of lug assumed to be 1 in.

Required section modulus $= \frac{36,750}{25,000} = 1.465.$

Required thickness of lug $= 1.05$ in. Use 1-in plate as assumed.

Length required for shear between lugs $= \frac{49,000}{2 \times 150 \times 8} = 20.4$ in. Use 1 ft. $8\frac{1}{2}$ in.

Depth of toe $= \frac{49,000}{1600 \times 8} = 3.84$ in. Use 4 in.

Bearing stress of 1600 lb. per sq. in. is used, as timber fibres are confined and therefore capable of taking full end compression.

Stress in bolster = horizontal component of stress in two $\frac{3}{4}$-in. bolts, $= 4830$ lb. $\times 2 \times 0.5 = 4830$ lb.

Number of shear pins required $= \frac{4830}{800 \times 8} = 0.75.$ Use one 2-in. pin.

BILL OF MATERIAL FOR ONE END-CONNECTION

	Pounds
One plate, 1 by 8 by 12 in., at 27.20 lb	27.20
One plate, 1 by 8 in. by 4 ft., at 27.20 lb	109.00
One bolt, $\frac{3}{4}$ by 25 in., at 3.52 lb	3.52
One bolt, $\frac{3}{4}$ by 33 in., at 4.54 lb	4.54
Four bolts, $\frac{5}{8}$ by 15 in., at 1.54 lb	6.16
Two washers, $\frac{3}{8}$ by $3\frac{5}{8}$ by $3\frac{5}{8}$ in., at 1.40 lb	2.80
Eight washers, $\frac{5}{16}$ by $3\frac{5}{8}$ by $3\frac{5}{8}$ in., at 1.02 lb	8.16
Total weight of steel	161.38

One 2-in. extra heavy steel pipe-pin.
One bolster 6 by 8 in. by 6 ft., 24 ft. B.M.
One hardwood block.

COST OF ONE END-CONNECTION

Steel, 161.38 lb., at $0.04	$6.46
Pipe pins, 1, at $0.25	0.25
Bolster, 24 ft. B.M., at $0.04	0.96
Hardwood block, 1, at $0.50	0.50
Total cost end connection	$8.17

Generated on 2024-09-30 01:12 GMT / https://hdl.handle.net/2027/uiug.30112007838425
Public Domain, Google-digitized / http://www.hathitrust.org/access_use#pd-google
Digitized by Google
Original from UNIVERSITY OF ILLINOIS AT URBANA-CHAMPAIGN

the holes in the timber are to be bored in accordance with the specifications to be given in the concluding article of this series. The lag screws are to be screwed and not driven into place. Lag screws are better fitted for this type of joint than are bolts, as it would be practically impossible to bore a hole from one plate as a template and strike the corresponding hole in the opposite plate exactly. Consequently, were bolts to be specified, it would undoubtedly be found after the fabrication of the joint that the bolts were sprung or bent into place, and their value in shear would be questionable.

This type of end detail is well suited to trusses of an A-shape, resting upon posts. The side plates in such cases may be extended to engage the top of the post, and thus to give considerable stiffness to the building-frame.

Type E. In Fig. 24 is shown a detail of end joint using a steel shoe made of two plates. This detail is similar to that shown in Jacoby's 'Structural Details, p. 262, Fig. 63b. The points to be noted in a design of this type are (1) the depth of lugs cut into the chord to give the required bearing area, (2) the thickness of the projecting lug to resist bending, (3) the distance between lugs in order that there may be sufficient shearing area to take the increment of stress, (4) the depth of the vertical end-cut of the upper chord so that the necessary area be provided for bearing against the fibres of the timber, (5) the length of horizontal cut on the upper chord for distributing the vertical component of its thrust across the fibres of the lower chord, and finally (6) the size of the inclined bolts for holding the joint together.

Attention should be called to the fact that in this detail, the centre line of the upper chord intersects the base of the shoe practically at the toe of the shoe. In consequence, there will be a tendency for the shoe to rotate in a counter-clockwise direction, bringing an uneven distribution of bearing over the base of the shoe, with a possible crushing of the fibres of the wood at the top of the lower chord under the toe of the shoe. This tendency to uneven bearing pressure will be counteracted by the action of the inclined bolts, which, if always tight, will come into play with the application of the load to the truss, and will cause a readjustment of the joint stresses and a consequent approximately uniform distribution of the vertical bearing pressure.

From the standpoint of field work, this type of shoe is an excellent one, though extravagant of steel. It is simple in its action and comparatively easy to frame into the timber. Care must be taken, of course, to see that both lugs have an even bearing against the chord. As has been noted already, this is a hard thing to secure, and is a fault of all shoes having more than one bearing surface. However, the shoe has only two lugs to fit, as against eight in Type C. Moreover, the inspection for uniformity of bearing is easy to make, and if necessary shimming can be done readily and effectively.

This shoe can only be used for stresses requiring not more than two lugs, hence its field of application is limited. Another defect is that the forge work is difficult with the thickness of plate used. Especially is this true of the bending of the end of the inner plate to form the inner lug. Incidentally, this detail forms a good example of the consideration of actual unit working stresses as compared to purely theoretical values, as mentioned in the first article of this series. With a 2-in. depth of lug, the bearing pressure against the ends of the fibres is assumed to be 1600 lb. per sq. in. On account of the fillet formed in bending the plate, the actual bearing area will be decreased and the actual unit working stress will probably be around 1800 lb. per square inch.

Type F. Type F, illustrated by Fig. 25, is a modification of Type E, in which steel tables riveted to the shoe plate are substituted for the lugs of Type E. Its advantages are (1) the main plate may be reduced to the minimum thickness as required by consideration of shear and tension alone, (2) any number of tables may be used, and (3) the forge work is less than in the previous type. A point to be considered in a shoe of this type is that no table should be placed under the end of the batter post. The notch for the table will invariably be made deeper than the table itself, so that the vertical bearing of the steel table on the timber chord cannot be counted upon to distribute load.

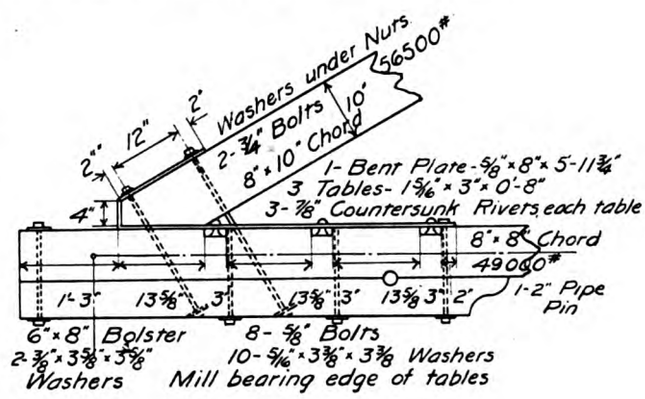

FIG. 25. END JOINT, TYPE F.

COMPUTATIONS

Depth of toe as in type C, 4 in.

Area required for bearing between upper and lower chord $= \frac{28,125}{285} = 99$ sq. in.

A 10-in. depth will therefore be required for the upper chord, giving an area of 8 by 13 in. = 104 sq. in.

Depth of tables (assuming three used) $= \frac{49,000}{3 \times 8 \times 1600} = 1.275$ in. Use $1\frac{5}{16}$ by 3 in.

Assuming three rivets in each table, stress in each rivet $= \frac{49,000}{9} = 5450$ lb. Use three $\frac{7}{8}$-in. rivets in each table.

Thickness of plate for bearing against rivets $= \frac{5}{8}$ in.

Thickness of plate for shear $= \frac{49,000}{10,000 \times 8} = 0.614$ in.

Thickness of plate for tension $= \frac{49,000}{16,000 \times (8 \text{ in.} - 2.80 \text{ in.})} = 0.59$ in.

Make plate $\frac{5}{8}$ in. thick.

Generated on 2024-09-30 01:12 GMT / https://hdl.handle.net/2027/uiug.30112007838425
Public Domain, Google-digitized / http://www.hathitrust.org/access_use#pd-google
Digitized by Google
Original from UNIVERSITY OF ILLINOIS AT URBANA-CHAMPAIGN

Moment of rotation of tables $= \frac{1.3125 \text{ in.} + 0.625 \text{ in.}}{3} \times \frac{49{,}000}{3}$

$= 15{,}800$ pound-inches.

Stress in bolts $= \frac{15{,}800}{3\frac{1}{2}} = 4520$ lb.

Add stress due to pin in bolster $= \frac{1}{4} \times \frac{1}{2} \times 800$ lb. $\times 8$ in. $=$ 800 lb.

Total stress in two bolts $= 5320$ lb. Use two $\frac{5}{8}$-in. bolts.

Using two $\frac{3}{4}$-in. diagonal bolts, the horizontal component in the bolster will be as in Type C, requiring one pin.

Distance required between tables for shear $= \frac{49{,}000}{3 \times 8 \times 150} =$ 13.6 in. Use $13\frac{5}{8}$ in.

BILL OF MATERIAL FOR ONE END-CONNECTION

	Pounds
One plate, $\frac{5}{8}$ by 8 in. by 5 ft. $11\frac{3}{4}$ in., at 17 lb.	101.50
Three plates, $1\frac{5}{16}$ by 3 by 8 in., at 8.95 lb.	26.85
One bolt, $\frac{3}{4}$ by 23 in., at 3.28 lb.	3.28
One bolt, $\frac{3}{4}$ by 30 in., at 4.13 lb.	4.13
Eight bolts, $\frac{5}{8}$ by 16 in., at 1.62 lb.	12.96
Ten washers, $\frac{5}{16}$ by $3\frac{3}{8}$ by $3\frac{3}{8}$ in., at 1.02 lb.	10.20
Two washers, $\frac{3}{8}$ by $3\frac{5}{8}$ by $3\frac{5}{8}$ in., at 1.40	2.80
Nine $\frac{7}{8}$-in. rivet heads, at 0.24 lb.	2.16
Total weight of steel	163.88

One 2-in extra heavy steel pipe-pin.

	Ft. B.M.
One bolster, 6 by 8 in. by 7 ft.	28.00
One 2 by 8 in. by 40-ft. extra length upper chord	26.50
	54.50

(Total B.M. $= 53$; use one-half only as labor will be practically the same.)

COST OF ONE END CONNECTION

Steel, 163.88 lb. at, \$0.04	\$6.55
Pipe-pin, one, at \$0.25	0.25
Lumber, 54.50 ft. B.M., at \$0.04	2.18
	\$8.98

The size of diagonal bolts in both Types E and F are not susceptible of computation, but are determined by judgment and experience. In the present instance, two $\frac{3}{4}$-in. bolts have been used for the diagonals, and two $\frac{5}{8}$-in. bolts for holding the lugs or tables in their notches. The sizes of the vertical bolts are found as shown in the detailed computations.

Type G. Fig. 26 illustrates a detail of end joint in which a cast-iron shoe is used to transmit the thrust of the batter post to the lower chord. The details of such a shoe may be arranged in several ways, but the form shown represents a rather common type. As there are no diagonal bolts, the vertical pressure of the shoe on the lower chord is not uniform, and hence a toe has been provided, extending beyond the end of the batter post. The depth of the lugs are determined by limitations of end bearing on the timber, and their spacing by considerations of shearing of the timber. As the area of the base of the shoe is large, the first lug may be placed underneath the batter post. The thickness of the lugs is found by treating them as projecting cantilevers taking shear and bending, using the stresses shown in the detail computations. The number, size, and arrangement of ribs is largely a question of judgment, remembering that cast iron is rather brittle, and that the shoe must consequently be well stiffened to resist rough handling. The thickness of the metal is determined by the requirements of tensile and flexural stresses and by general considerations of a minimum thickness for castings to resist the unknown stresses of shrinkage and the probability of unseen blowholes.

Type H. Type H, illustrated in Fig. 27, is a cheap and, with well-seasoned timber, effective type of end joint, where the circumstances of clearance will permit of its being used. The principles involved in its design are simple; the pins take the whole thrust, the bolts being assumed to resist a tension equal to one-half the total stress on the lower chord. The bolster must be investigated for shear on the uncut portion, and tension on the net section back of the surface of application of the upper chord. It must be emphasized that the whole effectiveness of the joint depends on the question of whether any shrinkage of the timber, subsequent to the fabrication of the joint, is to be apprehended. If unseasoned timber is likely to be used in

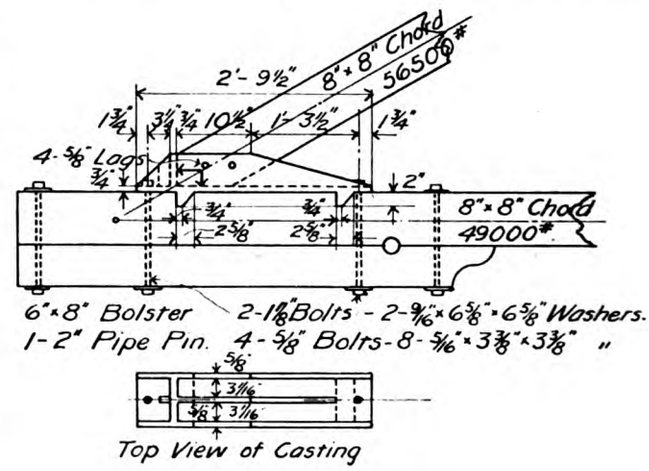

FIG. 26. END JOINT, TYPE G.

COMPUTATIONS

Depth of toe:

$\theta = 60°$, $n = 1400$ lb. per sq. in., from Fig. 3, Part II.

Required area in bearing $= \frac{49{,}000}{1400} = 35$ sq. in.

Required depth of vertical cut $= \frac{35}{8} = 4.4$ sq. in.

Required area of horizontal cut:

$\theta = 30°$, $n = 650$ lb. per sq. in., $A = \frac{28{,}125}{650} = 43.2$ sq. in.

Length of horizontal cut $= \frac{43.2}{8 - (3 \times \frac{5}{8})} = 7.1$ in.

Maximum unit bearing-pressure of shoe on lower chord:

As designed, toe of shoe is 9 in. beyond point where the vertical component of the thrust of upper chord intersects base of shoe. Call this distance $u = 9$ in. Let length of shoe be $L = 2$ ft. $9\frac{1}{2}$ in. $= 33\frac{1}{2}$ in. Let $p =$ maximum unit stress desired. Then $p = 2\left(2 - \frac{3u}{L}\right) \times \frac{P}{L}$, where $P = \frac{\text{Vertical reaction}}{\text{Width of chord}} = 3520$ lb.

Therefore $p = 250$ lb. per sq. in.

Depth of lugs as in Type E, 2 in.

Thickness of lug; as in Type E, bending moment on lug $= 24{,}500$ lb. $\times 1\frac{3}{8}$ in. $= 33{,}700$ pound-inches.

Generated on 2024-09-30 01:11 GMT / https://hdl.handle.net/2027/uiug.30112007838425
Public Domain, Google-digitized / http://www.hathitrust.org/access_use#pd-google
Digitized by Google
Original from UNIVERSITY OF ILLINOIS AT URBANA-CHAMPAIGN

Required section modulus $= \frac{33{,}700 \text{ in. lb.}}{4000} = 8.45 = \frac{1}{6} \times 8 \text{ in.} \times t^2$.

Required thickness of lug $= t = 2.62$ in., make $2\frac{5}{8}$ in.

Distance required between lugs as in Type E $= 20\frac{1}{2}$ in.

Moment of rotation of lugs $= 24{,}500 \text{ lb.} \times \frac{1}{2}\ (2 \text{ in.} + \frac{3}{4} \text{ in.}) = 33{,}800$ in. lb.

Stress in bolt back of lug $= \frac{33{,}800}{(2\frac{5}{8} \text{ in.} + \frac{3}{4} \text{ in.})} = 10{,}000$ lb.

Use one $1\frac{1}{8}$ in. bolt.

BILL OF MATERIAL FOR ONE END CONNECTION

One casting, weight 118 lb.	118 lb. cast iron
	Lb. steel
Two $1\frac{1}{8}$ by $16\frac{1}{2}$ in. bolts, at 6.71 lb.	13.4
Four $\frac{5}{8}$ by 16 in. bolts, at 1.63 lb.	6.5
Two washers, $\frac{1}{2}$ by $6\frac{5}{8}$ by $6\frac{5}{8}$ in., at 6.2 lb.	12.4
Four washers, $\frac{5}{16}$ by $3\frac{3}{8}$ by $3\frac{3}{8}$ in., at 1.01 lb.	4.0
	36.3
One 2 in. extra-heavy pipe-pin.	
One bolster, 6 by 8 in. by 6 ft.	24 ft. B.M.

COST OF ONE END CONNECTION

118 lb. cast iron, at $0.0325	$3.84
36.3 lb. steel, at $0.04	1.45
One 2-in. pipe-pin, at $0.25	0.25
One bolster, 24 ft. B.M. lumber, at $0.04	0.96
Total cost of one end connection	$6.50

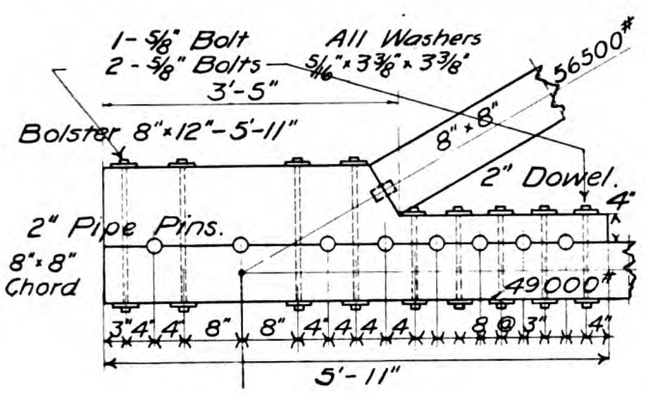

FIG. 27. END JOINT, TYPE H.

COMPUTATIONS

Required area of bolster for shear $= \frac{49{,}000}{150} = 327$ sq. in.

Required length of uncut portion of bolster for shear $= \frac{327}{8} = 40.5$ in.

Required number of 2-in. pins $= \frac{49{,}000}{8 \times 800 \text{ lb.}} = 7.7$. Use 8 pins.

Required net area of bolster for tension:

Maximum stress on cut portion of bolster $= 4 \times 6400$ lb. $= 25{,}600$ lb.

Net section of bolster as detailed $= 3$ by 8 in. $= 24$ sq. in.

Unit stress in tension $= \frac{25{,}600}{24} = 1070$ lb. per sq. in.

Total stress in bolts $= \frac{1}{2} \times 49{,}000$ lb. $= 24{,}500$ lb.

As detailed, have eleven $\frac{5}{8}$-in. bolts, 35,500 lb.

BILL OF MATERIAL FOR ONE END CONNECTION

	Lb.
Five $\frac{5}{8}$ by $21\frac{1}{4}$-in. bolts, at 2.17 lb.	10.9
Six $\frac{5}{8}$ by $13\frac{1}{4}$-in. bolts, at 1.4 lb.	8.4
Twenty-two washers, $\frac{5}{16}$ by $3\frac{3}{8}$ by $3\frac{3}{8}$ in., at 1.01 lb.	22.2
One dowel, 2 by 4 in., at 3.6 lb.	3.6
Total weight of steel	45.1
Eight 2-in. extra-heavy steel pipe-pins.	
One bolster, 8 by 12 in. by 6 ft.	48.0 ft. B.M.

COST OF ONE END CONNECTION

Steel, 45.1 lb., at $0.04	$1.80
Eight pipe-pins, at $0.25	2.00
One bolster, 48 ft. B.M. lumber, at $0.04	1.92
Total cost of one end connection	$5.72

the framing, the detail should not be used, as the cross-shrinkage of the bolster and chord will allow the pins to become loose, and an undue strain will come upon the bolts with a consequent slip of the joint. This detail of end joint may be further modified by omitting the shear pins, and notching the bolster into the lower chord, in which case a small shrinkage will not cause the joint to slip.

General Summary of End Joints. For the details of end joints using lag screws, the question may arise as to whether or not all of the lag screws may be counted upon as acting together. I believe that this condition will be realized approximately; certainly to the same extent that the lugs of the other types of shoes will act together. As has been noted before, the holes for the lag screws should be either punched or drilled, preferably the latter, to a diameter not greater than $\frac{1}{32}$ in. larger than the nominal diameter of the lag screw. It is to be emphasized that all lag screws are to be screwed, and not driven into place, in holes of the proper diameter. First, a hole should be bored with a length and diameter equal to the length and diameter of the unthreaded shank of the lag screw, continuing with a second hole of a length and diameter of the threaded portion of the shank at the base of thread. Careful and insistent inspection is necessary to secure the condition of lag screws screwed into place, as the carpenter will almost invariably drive the screws into place, if not watched.

In all the shoes with riveted lugs, special care must be exercised to see that good riveting is secured. This statement may seem so self-evident as to be foolish to mention. It must be remembered, however, that the steel and iron work on a timber-framed structure is usually let to a small iron-shop, if not to a blacksmith, and careless work is to be anticipated. Attention must also be paid to the milling of the bearing faces of the lugs. It is a curious fact that the average iron-worker regards any piece of steel or iron as being so superior to timber in strength, that he does not consider defective forge-work or riveting as of much importance. In his opinion, a failure of a steel shoe on a timber truss would be an impossibility. Again, in fabricating the truss, the steel shoes themselves should always be used as templates in cutting the notches for the tables, and boring the holes. The use of a well-made shoe, neatly finished, will result in more careful work on the part of the carpenter when framing the truss, than if the shoe is roughly made. To secure the best results, the steel shoes, as well as all the iron work, should be detailed and marked carefully and plainly. All the work should be carefully inspected before it is allowed to leave the shop. This inspection should preferably be done before painting the iron, if painting is to be done.

Generated on 2024-09-30 01:14 GMT / https://hdl.handle.net/2027/uiug.30112007838425
Public Domain, Google-digitized / http://www.hathitrust.org/access_use#pd-google
Digitized by Google
Original from UNIVERSITY OF ILLINOIS AT URBANA-CHAMPAIGN

In the details shown in Fig. 24 and 25, the hole for the diagonal bolts in the upper chord should be specified as $\frac{1}{8}$ in. larger than the diameter of bolts. This is to allow the upper chord or batter post to slip easily into the toe of the shoe when the load is brought to bear upon the truss, and to thus take care of a possible untrue fit of the batter post into the shoe. With this arrangement, no bending of the diagonal bolt will result, when the batter post wedges into the toe of the shoe. I have examined many roof trusses before erection, where shoes with tables or lugs have been used, and have found in a number of instances that the toe of the batter post did not touch the shoe. Obviously in such a case, when the truss was erected and the load applied, this bolt must have been badly overstrained, both in tension and bending, if it had a driving fit in the upper chord.

The preceding investigations show that the cast-iron shoe has the advantage in economy over the other metal shoes investigated for the case under discussion, while the end joint using 2-in. shear pins is the cheapest of all. It should not be assumed that this same relation as regards economy, holds for all trusses. In general, it has been my experience that joints of Types F and G, and especially Type F, are the most suitable and reliable for trusses with end stresses of some magnitude. Other joints of different types may be used for special cases, but it is believed that the types here shown will cover all the cases the engineer is likely to meet, where single-stick chords are used. The unit costs used may be questioned. It is not contended that the relative costs of joints as given represent the actual costs of each detail. Many factors that would influence the price cannot here be considered, and hence the net costs of the different types of joints are only roughly approximate.

ASPHALT PRODUCTION IN UNITED STATES

The total amount of natural asphalt produced in the United States during 1915 was 75,751 tons. The yearly production was small until 1888. Since that year it has ranged from 40,000 to 100,000 tons. In 1915, 21,739 tons came from Utah, 19,311 tons from Kentucky, 17,794 tons from California, and 16,907 tons from Oklahoma. There was also a small amount from Texas, which is included with Kentucky in the above figures. In the same year, 138,248 tons of natural asphalt was imported, 101,502 tons of which was from Trinidad and Tobago, and 32,098 tons from Venezuela. This is rather less than the average amount imported during the past five years. The reason for the decreasing consumption of natural asphalt in the face of the increased demand for asphalt products is the growing importance of the manufactured asphalt industry. In 1902, 20,826 tons of asphalt was manufactured from domestic petroleum, while in 1915, 664,503 tons was produced from the same source. In addition, asphalt made from Mexican petroleum, which was negligible in amount until recently, amounted to 388,318 tons in 1915.

PROGRESS REPORT OF KINGS COUNTY HIGHWAY COMMISSION

The report of the Kings County Highway Commission for the six months ended July 1, 1916, has recently been published. At the beginning of that period the balance remaining in the highway fund from the bond issue of $672,500 was $640,821.73. During the six months the total expenditure, less credits, was $118,424.63. Of this amount, $3414.15 was used for salaries and expenses of the highway commission, $7749.34 for engineering, $58,315.04 for materials, including freight and handling, and $45,385.91 was paid to contractors, the remainder being for miscellaneous items. Surveys have been completed on 74.5 miles of highway, and partly done on 22 miles, leaving 6.25 miles on which work has not been started. The office work is completed on 65 miles of highway and partly done on 16.25 miles more. Bridge surveys and plans have been completed on 74.5 miles of highway. The work has not progressed sufficiently to derive much cost data, but it is interesting to note that the engineering overhead so far is 7.2% and other overhead, 3.2%, making a total of 10.4%. The cost of engineering on this system should be unusually low, since all the highways follow section-lines and the country is level.

THE ELEPHANT BUTTE RAILROAD

To facilitate the construction of the Elephant Butte dam, a railroad 9.15 miles long was constructed from the Atchison, Topeka & Santa Fe line at Butte Junction near Engle to the dam-site. About a mile of the grading was done by Government forces, and the remainder by contract. Track laying was done by the Santa Fe company and paid for by the Government. The main line is operated by the Santa Fe company and part of the terminal tracks at the dam-site by the Government. From Butte Junction to the summit there is a maximum ascending grade of 1.6%. From the summit to the dam-site there is a maximum descending grade of 3.7%. In constructing the railroad, 106,710 cu. yd. of material, mostly solid rock, was excavated at an average cost of $1 per cu. yd. There are two large trestles on the line. One is 448 ft. long, contains 196,900 ft. B. M. of lumber and was constructed at a cost of $51.50 per M B. M. The other is 368 ft. long, contains 134,700 ft. B. M. of lumber and cost $69 per M B. M. The total cost of the line exclusive of track material owned by the Santa Fe railroad, was $220,000.

The first train was operated over the line on March 2, 1911. Up to March 23, 1916, when the construction of the dam was practically complete, the total amount of freight handled from Butte Junction was 136,500 tons, equivalent to 1,250,000 ton-miles. In addition, 934,000 tons (962,000 ton-miles) of rock and sand was handled over the terminal tracks. The total saving in freight over team hauling has been $150,000, after allowing for the entire cost of constructing the line.

Generated on 2024-09-30 01:13 GMT / https://hdl.handle.net/2027/uiug.30112007838425
Public Domain, Google-digitized / http://www.hathitrust.org/access_use#pd-google
Digitized by Google
Original from UNIVERSITY OF ILLINOIS AT URBANA-CHAMPAIGN

Methods and Costs of Producing Crude Petroleum in California

By THOMAS COX*

Introduction

The methods of recovering oil in this State have been discussed elsewhere at such length that only a brief description will be given in this paper. When a well has been completed and brought in, the following apparatus has been used: a derrick, bull and calf wheels, engine, sand reel, and either a rotary or standard drilling-outfit. What is then added or taken away depends upon the method of operation in the future.

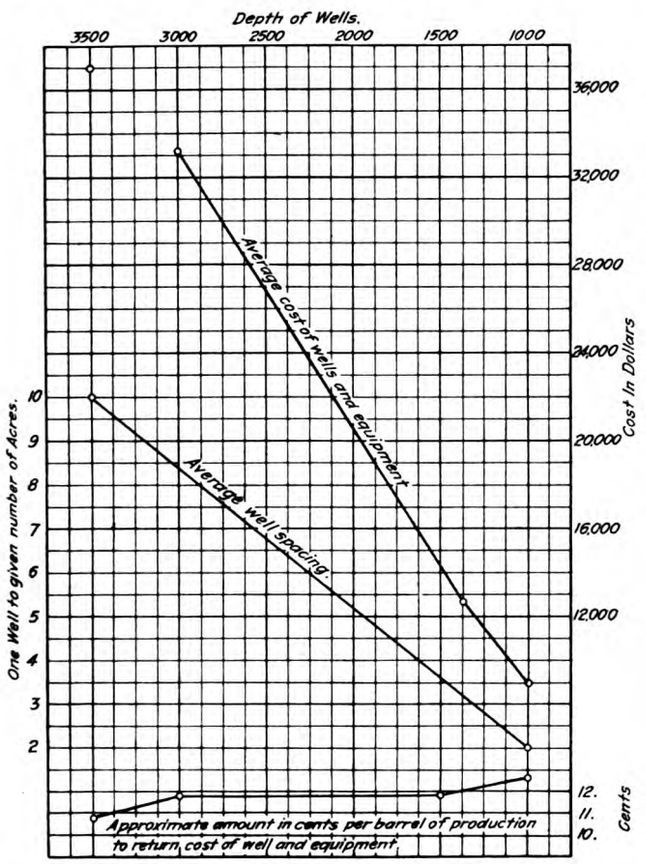

FIG. 1. DIAGRAM SHOWING AVERAGE COST OF WELLS AND EQUIPMENT, AVERAGE WELL-SPACING, AND RETURN NECESSARY TO REDEEM COST OF WELL AND EQUIPMENT.

In California, nearly all wells are finished with standard tools and the rotary equipment is removed. In some cases, wells drilled with a steam-engine are pumped with electric motors, and the engine is removed. In nearly all cases that do not involve gusher or else serious water conditions, a 'string' of 3-in. tubing is added, through which the oil is raised by means of a plunger pump operated by the walking-beam or by a pumping-jack.

*Consulting engineer, 463 Ellita avenue, Oakland.

Methods of Operation

Jack System: The wells on any property are operated either collectively by a jack-power system or else individually, whichever happens to be the most economical method. When the wells are less than 1500 ft. deep, and after they have been freed from sand troubles a jack system may be installed and a larger number if not all the wells pumped by one central power. The number to be pumped by one power depends on the well-spacing, depth, gravity of the oil and the topography. As many as 36 wells have been pumped by one

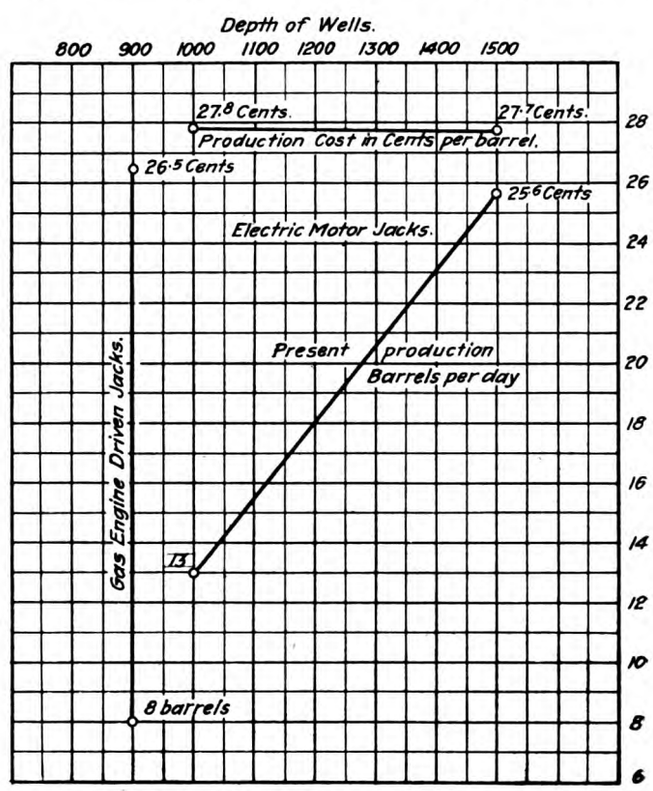

FIG. 2. PROPERTIES FULLY DEVELOPED, OPERATED BY PUMPING POWERS, ELECTRIC-MOTOR OR GAS-ENGINE DRIVEN.

power in this State. In the use of this system a pumping-jack is placed over each well and operated by means of a wire line connected to an eccentrically-operated horizontal ring. The central power can be operated most efficiently by a gas-engine if natural gas is available, or if not, by electric power. If neither gas nor electricity is available, a steam-engine must be used. In cleaning or re-drilling the wells, steam may be supplied to the original drilling-engine by a portable boiler if the rig has been kept intact, or if it has been dismantled, the work may be done with a portable rig.

Generated on 2024-09-30 01:14 GMT / https://hdl.handle.net/2027/uiug.30112007838425
Public Domain, Google-digitized / http://www.hathitrust.org/access_use#pd-google
Digitized by Google
Original from UNIVERSITY OF ILLINOIS AT URBANA-CHAMPAIGN

Individual Well Operation: In operating the wells individually, a central plant may be used to generate steam or compressed air to be distributed to each well, or the wells may be pumped by a gas-engine or electric motor. If water is coming into the oil-sands and threatens to drive out the oil, it must be controlled by the installation of an air lift. Gusher conditions are temporary in every case and a minimum of waste is accomplished by judicious handling.

Central Plant: The use of a central boiler-plant utilizing oil as fuel and supplying steam to engines placed at each well is a most expensive and wasteful method. The steam-pipe lines are laid in the ground and are seldom insulated except for the earth cover. There is a great deal of condensation in cold weather and the efficiency of the system is low.

Compressed air supplied by a central plant has a decided advantage over steam in that it does not condense in transit, but the installation of air-compressors

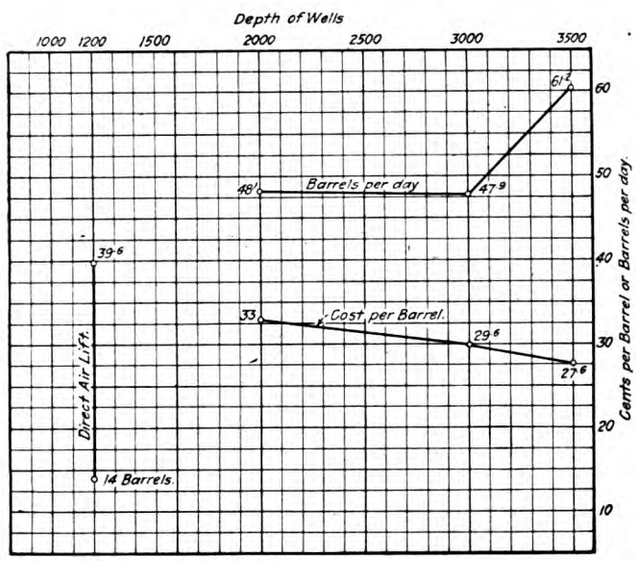

FIG. 3. PROPERTIES FULLY DEVELOPED, OPERATED BY INDIVIDUAL GAS-ENGINES AND DIRECT AIR-LIFT.

makes the cost of this system prohibitive unless water conditions necessitate the use of an air-lift on some of the wells.

Electric Motors: Each individual well may be pumped by an electric motor of the variable or two-speed type, reversible and belted through a counter-shaft to the band-wheel in the same way as a steam engine. All cleaning and re-drilling may be done with the motor.

Gas-Engines: Where natural gas can be obtained from the wells, the installation of individual gas-engines affords one of the most economical forms of operating. These engines are fitted with a special reversible-drive pulley-clutch, for use in cleaning and re-drilling the wells.

Air-Lift: Where water is entering the oil sands from outside sources and the plunger pump is unable to cope with it, it is necessary to install an air-lift in a sufficient number of wells to keep the water level at a constant depth. When this has been accomplished the remaining wells may be pumped with a plunger pump by setting the barrel at the water level.

Methods not in General Use: Many new and unique methods have been tried for the recovery of oil, but nearly all have proved either mechanically inefficient or too costly to operate. One of the most notable is the wire-line method. Here a continuous wire line is run up through the tubing and the oil which clings to it is wiped off. This method is seldom used because the wire line cuts out quickly on account of the many short bends necessary. This method has been used in Russia with manila rope in place of the wire line.

Gusher Conditions: When a well is brought in in an area where high gas-pressure exists, the oil often flows from it forcibly, necessitating the installation of suitable gates and valves to control the flow. It is, however, only a temporary condition, as the pressure soon decreases to such an extent that it is necessary to raise the oil with a pump.

Choice of Pumping Method

In choosing the most economical method of recovery, the depth of the territory is the governing factor.

Shallow Territory: In an area where the wells are less than 1500 ft. deep and there is little or no water in the oil-sand, the jack-power system operated by gas-engine, electric motor, or steam-engine is the most economical. If, however, water has been allowed to enter the oil-sand, it is then necessary to install an air-lift system. The installation of compressors and air pipes is usually a costly undertaking but is often a necessity.

Deep Territory: It has not been found economical to install a jack system in territory which is over 1500 ft. In case there is much water present and the proper ratio of submergence is not available, it is impossible to operate an air-lift successfully. Therefore, in deep territory, the use of the plunger pump operated either by gas-engine, electric motor, or steam-engine becomes necessary.

Where natural gas can be obtained from the wells, the gas-engine is by far the most economical method. It is often decried as lacking the flexibility of the steam-engine, but with a proper concrete foundation it will fulfill every purpose of the steam-engine and give a more regular motion, which is better adapted for pumping. If wells are spaced so that there is not less than one well to ten acres, one man can attend to at least seven wells per tour.

When natural gas is not available, the electric motor is the most economical form of power, provided the cost of electric current is reasonable. The use of electric power permits a somewhat more efficient labor-distribution, as one attendant can attend to more wells than when gas-engines are used. Since the current must be purchased the ultimate cost of operation is slightly more. The electric motor is clean, efficient, and reliable, and needs little attention.

Steam power is usually supplied from small instal-

Generated on 2024-09-30 01:11 GMT / https://hdl.handle.net/2027/uiug.30112007838425
Public Domain, Google-digitized / http://www.hathitrust.org/access_use#pd-google
Digitized by Google
Original from UNIVERSITY OF ILLINOIS AT URBANA-CHAMPAIGN

lations for two to four wells, although central boiler-plants are sometimes used to furnish steam for as many as 15 wells. However, even under the most favorable conditions, this method is by far the most costly to operate. There are few places in this State where both electric and natural gas are so difficult to obtain as to justify the use of steam for pumping.

Costs of Various Types of Power Installation: The following estimates were prepared to show the comparative cost of operating methods and were computed for a property having 58 wells, pumping an average of 100 barrels per well per day. The existing steam-plants placed between each two wells used fuel oil. There were two steam pumps for oil delivery.

Type of installation.	Est. cost per well	Investment, %	Cost of pumping, cents per bbl.	Pumping cost, %
Individual steam-plants for each two wells, oil for fuel, line pumps, steam-engine at each well	$1320	100	8.18	100
Individual gas-engines at each well, including gas mains and all accessories	2160	163	3.07	38
Electric motors at each well, with all lines and accessories, purchasing power at $0.012 per kilowatt-hour	1200	92	6.30	77
Central plant with steam-turbines, natural-gas fuel, electric motor at each well	3000	264	3.52	44
Central-plant air-compressors direct connected to gas-engines using natural gas; air distribution to each well for operating present steam-engines by air	5150	390	3.70	46

The subsequent installation of gas-engines, using a larger type than that figured in the estimate, cost $2700 per well for the complete change, and resulted in a saving over the previous steam-power method of the cost of the whole equipment in about 15 months.

Production Costs: The figures presented below include all the cost of production excepting charges for overhead, interest on the investment, and redemption of capital invested. No standard method of accounting is in vogue among the oil companies so that the expression 'production costs' is without meaning, unless all items included are specified. The following items are included as embracing the actual expenditures necessary to produce oil.

Labor, power, supplies, tools.

Maintenance and repairs of pipe-lines, tanks, building, plant, and general equipment.

Shipping and dehydrating of oil.

Field superintendent and field office expense.

Taxes on lease property and liability insurance.

Re-drilling of old wells.

Drilling of new wells to maintain production.

In the investigation of costs in the California fields during the past year, many plants were not working to capacity on account of market conditions. Therefore, the actual performance and costs of the plants during this period are high and represent abnormal conditions. It must be noted also that there is no comparable relation of working costs between wells of equal depth unless they produce alike. Wells differ so much in production of oil per day that while the actual costs per well may be identical, the cost per barrel will differ in proportion to the difference in production. The size of the operating company also affects the cost per barrel, as often the small company is obliged to have a larger pay-roll in proportion to its output of oil than the large company. The age of the property and the

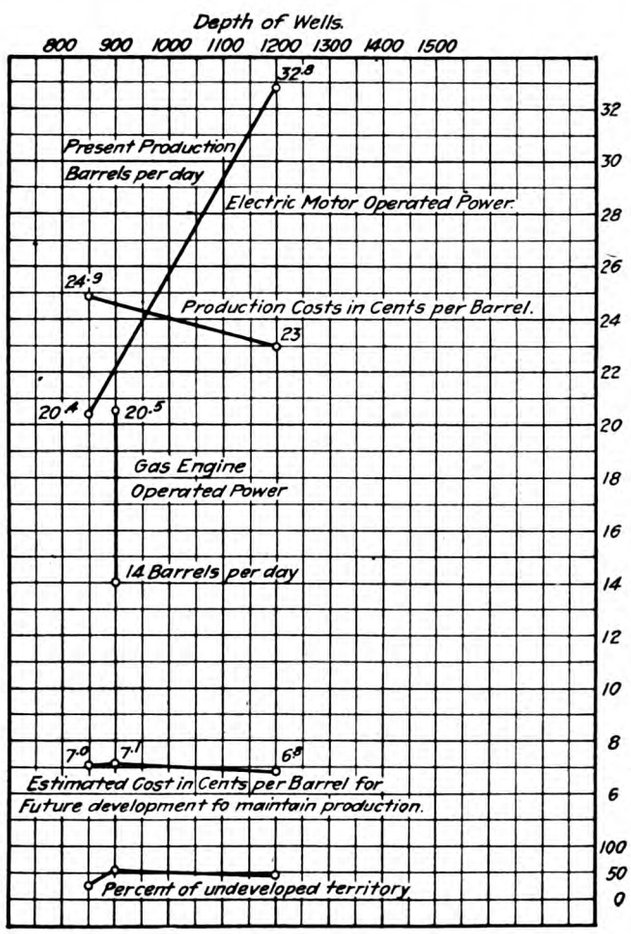

FIG. 4. PROPERTIES PARTLY DEVELOPED, OPERATED BY PUMPING POWERS, ELECTRIC-MOTOR AND GAS-ENGINE DRIVEN.

amount of development that has been done also affect the conditions of operating and consequently the cost.

The following summary has been compiled from data obtained during the appraisal of a large number of oil companies, and the computed costs are for operation under the best conditions. To obtain such results it was found necessary to adjust the actual working costs where they were found to be excessive. For example, if a property were being operated by individual steam-engines, when a jack-power system could be installed and operated more economically, the lower cost of operation is given.

Generated on 2024-09-30 01:11 GMT / https://hdl.handle.net/2027/uiug.30112007838425
Public Domain, Google-digitized / http://www.hathitrust.org/access_use#pd-google
Digitized by Google
Original from UNIVERSITY OF ILLINOIS AT URBANA-CHAMPAIGN

PRODUCTION COSTS

GAS PUMPING POWER-PLANT

	Wells under 1000 ft. in depth	
	Old properties fully developed	Operating properties with undeveloped territory
Number of properties	3	3
Total acreage	40	134
Number of wells pumping	23	40
Number of new wells estimated to develop property	...	19
Average daily present production	8	14
	Average of operating charges in cents per barrel	
Labor	17.0	10.3
Well operating	4.2	4.1
Shipping and dehydrating	2.8	2.8
Maintenance and repairs, pipe-lines	0.3	0.3
Power equipment	0.4	0.4
Tanks	0.1	0.1
General	0.1	0.1
Field overhead	1.6	1.2
Maintenance and repairs, old wells	...	1.2
Production costs	26.5	20.5
Estimated future development	...	7.0
Average total production cost per bbl.	26.5	27.5
Average cost per well, including equipment	$8,000	$8,200
Approximate amount invested in wells and equipment	$184,000	$328,000

MOTOR-OPERATED PUMPING-PLANT

	Old properties fully developed	
	Under 1000 ft.	1000 to 1500 ft.
Number of properties	8	14
Total acreage	168	284
Number of wells operating	108	134
Average daily production	13	25.6
	Average operating charges in cents per barrel	
Labor	13.0	12.7
Well operating	4.7	3.8
Fuel and power	3.4	4.0
Shipping and dehydrating	2.3	2.7
Maintenance and repairs, pipe-lines	0.2	0.2
Power equipment	0.3	0.4
Tanks	0.1	0.1
General	0.1	0.1
Field overhead	1.8	1.4
Maintenance and repairs, old wells	1.9	2.3
Average total production cost per bbl.	27.8	27.7
Average cost per well, including equipment	$8,000	$9,100
Approximate amount invested in wells and equipment	$864,000	$1,219,400

MOTOR-OPERATED PUMPING POWER-PLANT

	Operating properties not fully developed	
	Under 1000 ft.	1000 to 1500 ft.
Number of properties	22	30
Total acreage	875	1,274
Number of wells operating	156	238
Estimated number of wells to drill to fully develop property	164	219
Average daily present production, barrels	20.4	32.8
	Average of operating charges in cents per bbl.	
Labor	12.2	10.2
Well operating	4.6	4.2
Fuel and power	2.5	2.2
Shipping and dehydrating oil	2.4	3.3
Maintenance and repairs, pipe-lines	0.3	0.2
Power	0.1	0.2
Tanks	0.1	0.1
General	0.1	0.1
Field overhead	1.2	1.3

INDIVIDUAL-WELL MOTORS

Power purchased at $0.012 per kilowatt-hour

	Properties fully developed	Operating properties not fully developed			
Average depth	1585 ft.	Under 2000 ft.	2000 to 2500 ft.	2500 to 3000 ft.	Over 3000 ft.
Number of properties	2	4	3	2	2
Total acreage	40	360	100	140	120
Number of wells operating	6	37	8	8	2
Estimated number of wells to drill to develop property	..	45	14	12	10
Average daily production, barrels	20	28	130	80	123.5
		Average of operating charges in cents per barrel			
Labor	13.0	9.0	8.8	7.8	6.6
Well operating	4.5	4.1	4.0	4.4	4.9
Shipping and dehydrating	1.9	1.4	1.3	1.6	1.5
Fuel and power	6.5	5.5	3.6	4.0	4.5
Maintenance and repairs, pipe-lines	0.4	0.4	0.3	0.4	0.5
Power	0.4	0.4	0.4	0.4	0.5
General	0.1	0.1	0.1	0.1	0.1
Tanks	0.2	0.1	0.1	0.1	0.1
Field overhead	4.0	1.9	1.4	1.7	1.0
Redrilling	3.0	1.5	1.2	2.5	1.6
Production costs	....	24.4	21.3	23.0	21.2
Future development	....	8.6	8.3	11.9	15.8
Total	34.0	33.0	29.6	34.9	37.0
Average cost per well, including equipment	$15,400	$13,700	$24,500	$33,250	$34,500
Approximate amount invested in wells and equipment	$92,400	$506,900	$196,000	$266,000	$69,000

Generated on 2024-09-30 01:11 GMT / https://hdl.handle.net/2027/uiug.30112007838425
Public Domain, Google-digitized / http://www.hathitrust.org/access_use#pd-google
Digitized by Google
Original from UNIVERSITY OF ILLINOIS AT URBANA-CHAMPAIGN

	Average of operating charges in cents per barrel	
Maintenance and repairs, old wells..	1.4	1.2
Production costs	24.9	23.0
Estimated future development	7.1	6.8
	32.0	29.8
Average cost per well including equipment	$7800	$10,200
Approximate amount invested in wells and equipment	$1,216,800	$2,427,600

INDIVIDUAL GAS-ENGINES

	Properties fully drilled		
	Under 2000 ft.	2000 to 3000 ft.	Over 3000 ft.
Number of properties	2	5	3
Total acreage	40	328	230
Number of wells operating	8	38	13
Average daily production	48.1	47.9	61.2
	Average of operating charges in cents per barrel		
Labor	15.0	12.2	11.1
Well operating	7.6	8.8	8.3
Shipping and dehydrating	2.5	1.1	1.1
Maintenance and repairs:			
Pipe-lines	0.4	0.4	0.3
General	0.1	0.1	0.1
Tanks	0.2	0.2	0.3
Field overhead	4.3	4.2	2.9
Re-drilling	2.9	2.6	3.5
Total	33.0	29.6	27.6

	Under 2000 ft.	2000 to 3000 ft.	Over 3000 ft.
Average cost per well, including equipment	$19,600	$32,000	$36,000
Approximate amount invested in wells and equipment	$156,800	$1,216,000	$468,000

AIR-COMPRESSOR, DIRECT AIR-LIFT

	Property fully developed
Number of properties	1
Wells	5
Depth	1086 ft.
Acreage	10
Average present daily production	28
	Average operating charges, cents per bbl.
Labor	14.0
Well cleaning and upkeep	2.4
Oil shipping and dehydrating	2.8
Fuel and power	16.5
Maintenance and repairs, power	1.9
Pipes	0.2
Tanks	0.2
General	0.1
Field overhead	1.4
Total	39.5

No re-drilling or future development considered.

Cost per well, including equipment	$12,000
Approx. amount invested in wells and equipment	$60,000

INDIVIDUAL GAS-ENGINES

	Properties not fully developed				
	Under 1000 ft.	1000 to 2000 ft.	2000 to 2500 ft.	2500 to 3000 ft.	Over 3000 ft.
Number of properties	3	7	4	11	13
Total acreage	342	900	940	2935	4301
Number of wells operating	51	76	55	53	131
Estimated number of new wells to fully develop property	34	101	92	171	236
Present average daily production	104.5	44.8	70	77.5	123.6
	Average of operating charges in cents per barrel				
Labor	8.9	8.9	7.5	7.8	4.6
Well operating	5.9	6.5	5.8	4.9	4.3
Shipping and dehydrating	1.6	1.4	1.7	1.5	1.2
Maintenance and repairs, pipe-lines	0.3	0.3	0.3	0.3	0.3
General	0.1	0.1	0.1	0.1	0.1
Tanks	0.1	0.1	0.1	0.1	0.1
Field overhead	1.6	2.4	2.5	1.3	1.4
Re-drilling	1.1	1.5	1.4	1.6	1.3
Production costs	19.6	21.2	19.4	17.6	13.3
Estimated future development	3.6	9.7	8.0	10.0	8.1
	23.2	30.9	27.4	27.6	21.4
Average cost per well, including equipment	$8,800	$17,600	$24,000	$30,200	$36,200
Approximate amount invested in wells and equipment	$448,800	$1,337,600	$1,320,000	$1,600,600	$4,742,200

STEAM PLANTS

Actual operating conditions. Data incomplete, only information available.

Average depth	890 ft.	910 ft.	1020 ft.	1050 ft.	1100 ft.	1210 ft.	1220 ft.
Number of operating wells on property	3	28	13	7	3	5	4
Average daily production, barrels	11.6	14.2	12.2	24.0	22	20.1	27.5
	Cost in cents per barrel						
Labor	28.5	19.8	12.2	13.2	18.8	10.0	7.5
Fuel-oil used for steam-power, at 40c. per barrel	15.3	15.5	12.8	18.0	10.0	13.3	9.1
Water purchased for boilers	6.4	3.8	...	...	3.1	...	...
Well supplies	...	2.0	2.6	3.0	...	1.0	...
Boiler repairs	...	...	0.5	1.2	...	0.5	...
Totals	50.2	41.1	29.3	35.4	31.9	25.5	16.6

Generated on 2024-09-30 01:11 GMT / https://hdl.handle.net/2027/uiug.30112007838425
Public Domain, Google-digitized / http://www.hathitrust.org/access_use#pd-google
Digitized by Google
Original from UNIVERSITY OF ILLINOIS AT URBANA-CHAMPAIGN

No other cost records were available. It will be noted that no allowance is made in costs for general upkeep of plant, re-drilling of old wells, taxes, insurance, general field overhead or for future development to maintain production. These costs are given to show the higher power costs for fuel oil consumed over the other methods.

None of these figures include original cost of land, as such is not known, interest on investment, or sinking fund for redemption of capital.

The accompanying diagrams are numbered for reference as follows:

Fig. 1. This shows on the upper line, the average cost of drilling wells and necessary accompanying surface equipment according to various depths. The centre line gives the average practice of well spacing. The lower line is an approximate estimate of the

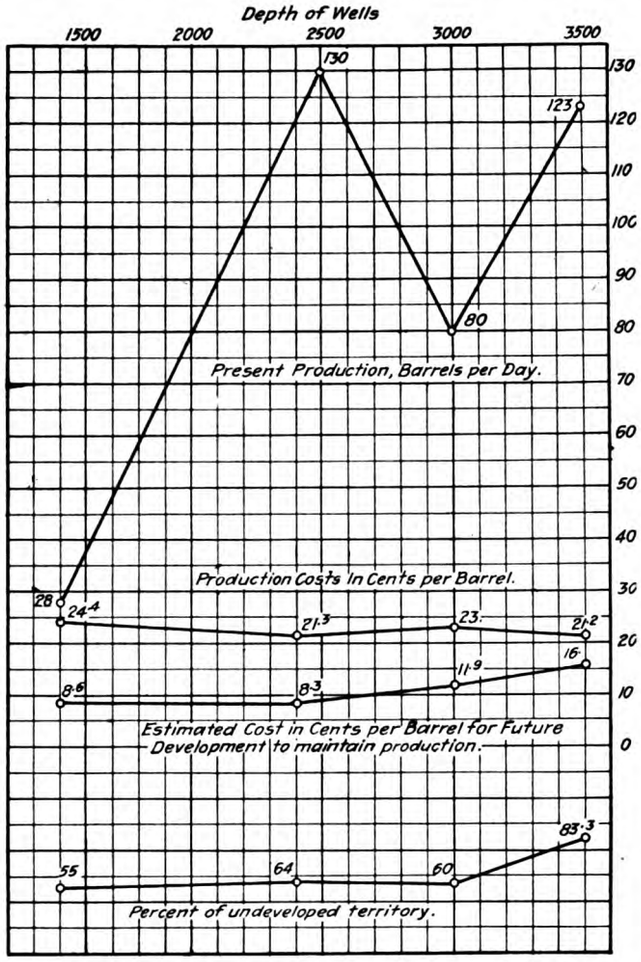

FIG. 5. PROPERTIES PARTLY DEVELOPED, OPERATED BY INDIVIDUAL-WELL ELECTRIC-MOTORS.

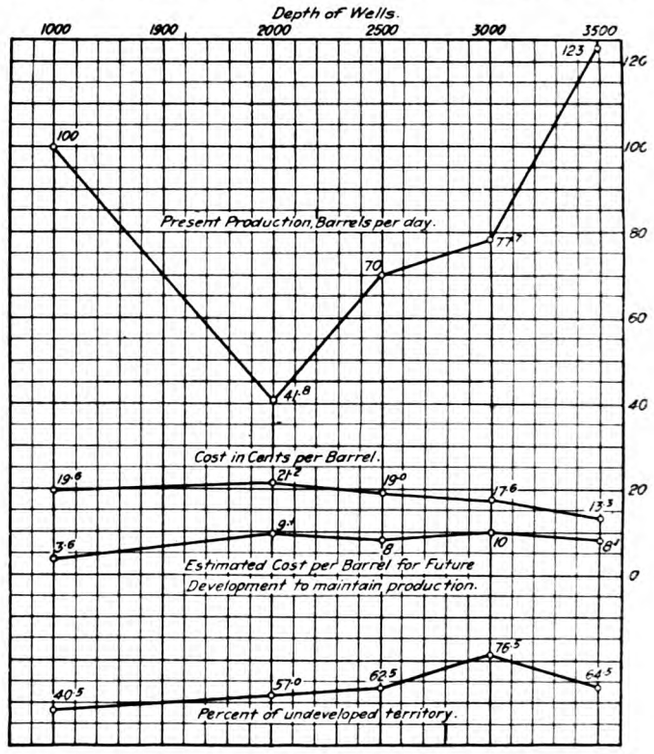

FIG. 6. PROPERTIES PARTLY DEVELOPED, OPERATED BY INDIVIDUAL GAS-ENGINES.

	Under 1000 ft.	1000 to 1500 ft.	1500 to 2000 ft.	2000 to 2500 ft.	2500 to 3000 ft.	Over 3000 ft.
	Average operating costs in cents per barrel of production					
	Properties fully developed					
Depth of wells						
Method of operating.						
Gas jack-plant	26.5	...	...	...	...	...
Motor jack-plant	27.8	28.6	...	...	...	...
Air lift	...	39.5	...	...	...	...
Individual well motors	...	34.0	...	...	...	...
Individual gas-engines	...	...	33.0*	...	29.6	27.6†
	Properties partly developed					
Gas jack-plant	20.5	...	...	...	...	...
Motor jack-plant	24.9	23.0	...	...	...	...
Individual well motors	...	...	24.4	21.3‡	23.0	21.2†
Individual gas-engines	19.6‡	...	21.2	19.4	17.6	13.3†
	Estimated amount per barrel of production for new development to maintain production					
	Properties partly developed					
Gas jack-plants	7.0	...	...	...	...	...
Motor jack-plant	7.1	6.8	...	...	...	...
Individual well motors	...	...	8.6	8.3	11.9	15.8
Individual gas-engines	3.6	...	9.7	8.0	10.0	8.1

*Two small isolated plants. †Larger producers than the shallower wells. ‡Gusher conditions on one property.

Generated on 2024-09-30 01:11 GMT / https://hdl.handle.net/2027/uiug.30112007838425
Public Domain, Google-digitized / http://www.hathitrust.org/access_use#pd-google
Digitized by Google
Original from UNIVERSITY OF ILLINOIS AT URBANA-CHAMPAIGN

amount per barrel of production necessary to repay the cost of well and equipment. No interest or sinking fund considered.

Fig. 2. Shows by diagram, that increase in production corresponds with decrease in costs; also that the gas-driven jack is more economical than one driven by an electric motor.

Fig. 3. Is similar to Fig. 2 and shows that costs are high on two small isolated properties. Air-lift is higher in cost per bbl. on account of more costly installation and extra power required to operate.

Fig. 4. Shows that cost per bbl. declines when production increases. It is also noticeable that the estimated cost for future development varies with the proportion of undrilled territory.

Fig. 5. With individual electric motor at each well, the same variations show as in Fig. 4.

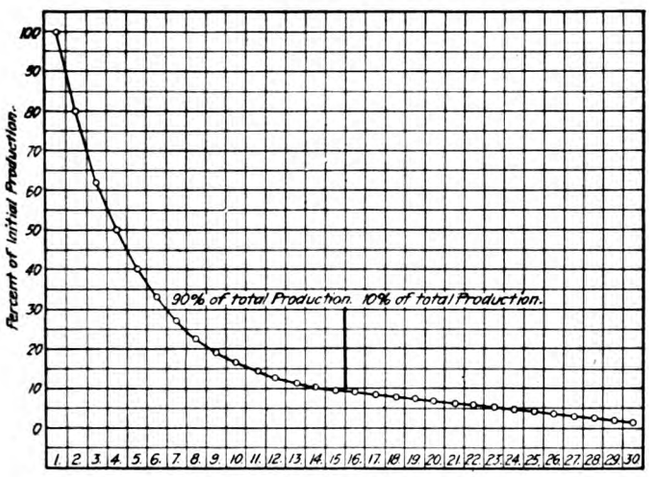

FIG. 7. AVERAGE DECLINE OF PRODUCTION FOR TYPE-WELL.

Fig. 6. With individual gas-engines at each well, the changes are similar to Fig. 4 and 5.

Fig. 7. This curve shows the average decline of production of one type of well. It is based on the records of a large number of wells in the San Joaquin valley.

It will be seen from the foregoing study that regular curves can not be constructed, as there are so many variables entering into each problem, age of property, productiveness, depth, method of operating, size of property and situation, each having its individual bearing on the changing conditions.

The data are submitted as being the result of the averages of working costs of many operating properties gathered during the process of appraisement. It must be remembered that the cost of production on some properties is somewhat lower, while on others it exceeds the figures given. The curves are from actual data and any undue variations must be credited to some irregular or abnormal condition until further investigations give a more definite method of determining cost and values. To accomplish this result operators should co-operate as much as possible in the exchange of data, and such exchange would be beneficial to all concerned.

STRENGTH OF CEMENT AND HYDRATED LIME MORTARS

Tests of various kinds of mortar were made recently by James S. Macgregor, Professor of Civil Engineering at Columbia University. Seven sets of brick piers, 8 by 8 by 84 in., were constructed. There were nine piers in each set. A different kind of mortar was used for each set. Three cylinders of each set were tested to rupture at 7 days, three at 28 days, and three at 90 days. The results are tabulated below, together with the cost of mortar per 1000 bricks, assuming the price of cement to be $1.80 per bbl., of hydrated lime, $10.50 per ton, and of sand, $0.80 per ton.

Set number	I	II	III	IV	V	VI	VII
Cement, cu. ft.	1.00	0.90	0.85	0.75	0.50	0.25	...
Sand, cu. ft.	3.00	3.00	3.00	3.00	3.00	3.00	3.00
Hydrated lime, cu. ft.	..	0.10	0.15	0.25	0.50	0.75	1.00
Cement, lb.	100	90	85	75	50	25	...
Sand, lb.	300	300	300	300	300	300	300
Hydrated lime, lb.	..	4	6	10	20	30	40
Ultimate strength, lb.							
At 7 days	2630	3080	2890	3120	2760	1945	1535
At 28 days	2840	3170	3230	3470	3100	2370	1870
At 90 days	2840	4435	4300	4170	3820	2720	1950
Cost	$2.18	$2.08	$2.03	$1.99	$1.77	$1.48	$1.24

It will be noted that several of the mortars using hydrated lime, No. V in particular, showed as good or better results than the straight cement mortar and at a considerably reduced cost.

MOTOR-VEHICLE STATISTICS FOR 1915

A bulletin recently issued by the Office of Public Roads and Rural Engineering of the U. S. Department of Agriculture gives the total number of automobiles in the country as 2,372,696, of motor trucks, 72,968, and motor-cycles, 199,329. The number of trucks, however, is not listed separately in most of the States. The 72,968 trucks that are listed separately are in States which list 812,456 automobiles, and by applying the same proportion, it is probable that 200,000 trucks and other commercial vehicles, and 2,250,000 so-called 'pleasure' cars is more nearly correct. The gross revenue from licensing motor-vehicles was $18,245,711, nearly all of which is used for highway construction and maintenance.

A steam-shovel was used for handling soft ground in driving the Rogers Pass tunnel on the Canadian Pacific Railroad. On part of the work two wall-plate drifts were driven and the excavation enlarged until a five-segment arch could be placed. The remainder of the excavation, about 66% of the total cross-section, was made with a steam-shovel. On another part of the work, where there was considerable loose ground with a good deal of water, five drifts were driven, one at the crown, two at the springing line, and two at the bottom of the tunnel. A seven-segment arch, resting directly on posts without wall-plates was used. The remainder of the excavation, about 51%, was made with a steam-shovel.

Generated on 2024-09-30 01:18 GMT / https://hdl.handle.net/2027/uiug.30112007838425
Public Domain, Google-digitized / http://www.hathitrust.org/access_use#pd-google
Digitized by Google
Original from UNIVERSITY OF ILLINOIS AT URBANA-CHAMPAIGN

Water Department Organization and Management Under Municipal Control*

By H. A. WHITNEY†

This paper has been prepared for an ideal case of a water system which serves a population of somewhat over 100,000 people. Many of the offices as shown on the chart and described herein may be combined or eliminated when the system is smaller or when the growth of population is not rapid. On the other hand when the growth is rapid or when the population is considerably larger than 100,000, the organization may be enlarged to suit the conditions. While this plan of organization applies specifically to a municipality, yet with slight changes it may be arranged to suit a public utility.

When the operation and management of a municipally-owned water department comes under the control of the city government, provision should be made that there be no political interference. The governing board should consist of from three to five citizens chosen by the mayor and approved by the council. The board should appoint the water-department manager.

At each of the regular monthly meetings of the water-board the manager should submit a report showing:

(1) The revenues from the various sources.
(2) The disbursements for various items.
(3) The amount of cash on hand.
(4) An estimate of the amount of interest accumulated from last report.
(5) An estimate of the amount of depreciation of the system from last report.
(6) Cost of maintenance for the past month.
(7) Cost of operation during the past month.
(8) Growth of the system during the past month.
(9) Increase in services during the past month.
(10) The average amount of water used per day.
(11) Progress of construction.
(12) Proposed extensions.
(13) Recommendations for future requirements.
(14) Advice as to the best means for financing construction work.

He should also prepare and submit all special reports when so required by the board.

The manager should administer the affairs of the water department through three divisions, namely, (1) Administration, (2) Engineering, (3) The Advisory Division. The operation of the department should be under three bureaus, namely, (1) Water Supply, (2) Sales and Accounting, (3) Distribution.

*Abstract of address delivered before the San Francisco Association of Members of the American Society of Civil Engineers, July 20, 1916.

†Hydraulic engineer, State Railroad Commission, San Francisco.

The Division of Administration

The division of administration should be under the direct control of the secretary of the water department. This division is segregated into four sections, namely, Correspondence, Requisition, Orders, Employment.

Correspondence: The secretary should conduct official correspondence. Letters sent from the department office, or from one branch of the department to another

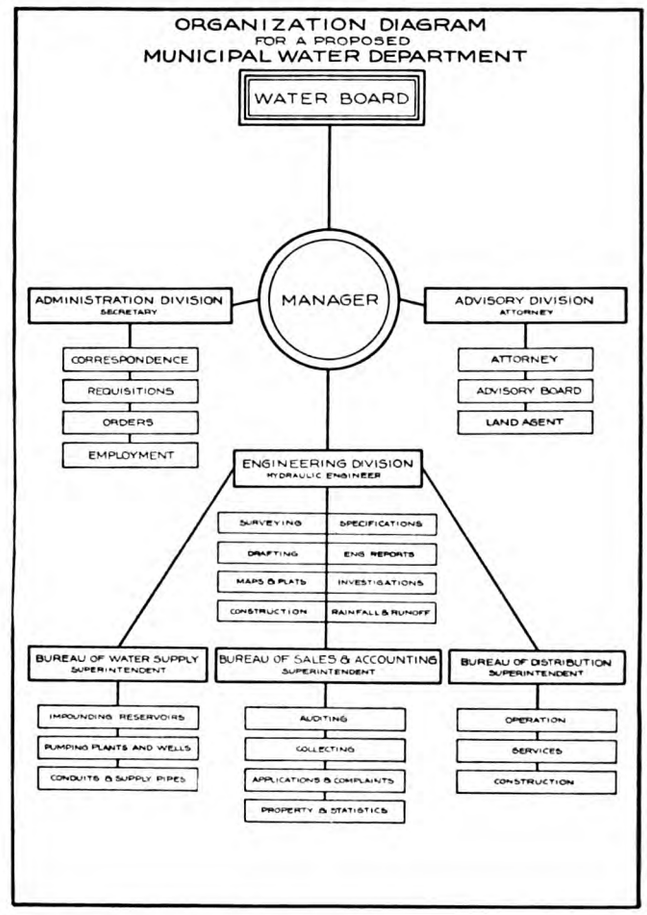

should pass through the secretary's hands. In the latter case, copies may be filed with the secretary and the original sent direct where quick results are necessary. All files for correspondence should be kept in the office of the secretary. Routine correspondence is handled by the secretary. Important letters are referred to the manager.

Requisitions: Requests for material should be written by the superintendents of the various bureaus and passed to the secretary, who orders the material from

Generated on 2024-09-30 01:13 GMT / https://hdl.handle.net/2027/uiug.30112007838425
Public Domain, Google-digitized / http://www.hathitrust.org/access_use#pd-google
Digitized by Google
Original from UNIVERSITY OF ILLINOIS AT URBANA-CHAMPAIGN

the various supply houses entering a classification number upon the requisition according to the job upon which it is to be used, or noting it as for stock.

Orders: All orders should pass through the division of administration and be signed either by the manager or by the secretary. Service orders and repair orders are generally passed direct to the bureaus of conservation or operation but important construction orders are taken to the manager for approval. All construction and service orders should have an estimate and diagram attached. Each order should be stamped with a classification letter and the job number before leaving the secretary's office.

Employment: Workmen should be hired through the division of administration. A card should be filed for each employee showing name, telephone number, age, and nationality, also the persons recommending him. Room should be left for notations such as 'when hired'—'reason for leaving'—'personality'—'type of workman,' etc. When a superintendent is in need of men he should notify the secretary, who will communicate with the applicants. If a foreman wishes some man who has been laid off he can notify the secretary to that effect. The timekeeper should see that employment cards are filled out when the men start work.

The Division of Engineering

The Division of Engineering is in charge of the hydraulic engineer. In the smaller municipalities this office may be held by the manager. The hydraulic engineer shall be responsible to the manager for the operation of the bureau of water supply, the bureau of sales and accounting and the bureau of distribution. To this end he shall have direct control of the engineering division, which should be separated into eight sections as follows:

1. Surveying. Under this section will come the laying out of the lines and grades of all reservoirs, dams, pipe-lines, buildings, conduits, flumes, etc., together with such topography as may be needed.

2. Drafting. All planning, designing, and drafting for buildings, dams, pipe-lines, details, reservoirs, conduits, and flume details should be done in the office of the division of engineering.

3. Maps and Plats. Maps of the distributing system and transmission mains should be kept up to date as well as plats showing the location of all service connections. Such construction maps as may be necessary would come under this section.

4. Construction. The superintendence of the construction and the inspection of all structures such as pipe-lines, dams, reservoirs, stand pipes, conduits and flumes would be in charge of this section.

5. Specifications. All standard and special specifications of structures and details of same whether for construction work or on requisitions would be written under the direction of the engineer in charge of this section.

6. Rainfall and run-off records as well as the gauging of the various streams and platting of the records would be attended to by the engineer having this work in charge.

7. Investigations. Investigations for electrolysis, durability of meters, condition of structures, and proper type of improvements, would be under this section.

8. Engineering Reports. Reports of an engineering nature such as condition of dams, reservoirs, conduits, pipe-lines, rainfall, run-off, and future improvements, would be under this section.

In the smaller cities one engineer might have several or all of these sections under his charge. All requests for materials and all orders issued to the various bureaus should pass through the division of engineering to the secretary.

The hydraulic engineer should have a series of forms prepared and the superintendents of the various bureaus so instructed that they will render daily reports of all work done including costs. He should be able to adjust his work so that he will be able to give the manager a report each Saturday of the cost of each job for the week ending the previous Thursday. This, if properly kept up, can be done without employing an experienced high-priced bookkeeper. This report should have the following features:

1. It should show the cost of materials.

2. It should show the comparative cost with the amount estimated.

3. It should be a system of bookkeeping without books, which files the original memorandum, saving the cost of copying and avoiding errors.

4. It should show the amount of labor and material put into the job to date.

A progress sheet showing the various jobs and a general summary of same should be prepared for the benefit of the manager at the board meetings.

The Bureau of Water Supply

The bureau of water supply should be in charge of a superintendent whose duty would be to direct the various station operators in the performance of their duties and report to the hydraulic engineer the progress of all work under his supervision as well as supply him with such information as will enable him to report to the manager the general condition of the water system at all times, both as regards the operation and maintenance. Under his charge will be: (1) The impounding reservoirs. (2) Pumping plants and wells. (3) Conduits and supply pipes.

The Impounding Reservoirs. Under this subdivision will be the policing of the water-sheds to see that they are at all times kept in a sanitary condition as well as protected from fires and that the creek beds are free from drift or other substances dangerous to pipe-lines and conduits. Roads and trails should be kept in a passable condition for vehicles or foot travel. Weeds and brush should be kept from the reservoir site below the probable high-water mark for the ensuing year. When so ordered by the hydraulic engineer the reservoir should be treated with copper sulphate or other chem-

Generated on 2024-09-30 01:19 GMT / https://hdl.handle.net/2027/uiug.30112007838425
Public Domain, Google-digitized / http://www.hathitrust.org/access_use#pd-google
Digitized by Google
Original from UNIVERSITY OF ILLINOIS AT URBANA-CHAMPAIGN

icals to destroy the algae and to keep the water in a pure and sanitary condition. The operation of the inlet and outlet valves should be done only upon the orders of the superintendent. A record should be made each day of the gauge height of the water in the reservoir. When possible stream-gauge and rain-gauge readings should be sent each day to the hydraulic division for record, as well as the records from the evaporation pans. Minor repairs to the dams and other structures should be made from time to time as needed.

Pumping Plants and Wells. The gathering of all ground waters from galleries and tunnels will come under this subdivision. Records should be sent to the hydraulic division showing the rise or fall of the water plane from day to day as well as the rainfall upon the water-sheds, and the quantity of water drained from the gallery. The operation of galleries should be directed by the foreman in charge, but maintenance and repairs should be under the direction of the superintendent. The operation of the wells should be in charge of the pump operator, the repairs and maintenance under the direction of the superintendent. A record of the pumping-head and the ground-water level should be sent to the hydraulic division each day together with data showing the quantity of water pumped from each well, the amount of fuel or power used, and the time the pump was out of service, together with the reason for the interruption.

When the system is extensive the maintenance and operation of the various pumping stations should be under the immediate direction of a chief pumping-station operator. He should have direct charge of all station operators and instruct them in their duties; see that the various stations run in harmony; that they are kept stocked with operating supplies, and report all accidents and breakdowns. At regular intervals a complete record of each station should be sent to the superintendent showing the amount of fuel or power used; the amount of other supplies consumed; what supplies were received; the amount of water received from various sources and the amounts of water delivered to the various reservoirs or other structures and at what pressures.

When filters are used the plant should be in charge of an experienced operator. A daily report should be sent to the superintendent showing:

1. The character of the raw water filtered.
2. The amount of coagulant used per 1000 gallons filtered.
3. The loss of head before filtration.
4. The loss of head after filtration.
5. The amount of suspended matter in the raw water.
6. The proportion of suspended matter removed by filtering.
7. The proportion of water used for washing the filters.
8. The supplies needed.
9. Supplies received since the previous report.
10. Repairs or betterments needed.

Conduits and Supply Pipes. The above portion of the Bureau of Water Supply should take in all head works, conduits, tunnels, aqueducts, syphons, and supply-mains necessary for the delivery of water from the impounding reservoirs or pump stations, into the main distributing reservoirs of the city. To this end the organization should be so perfected that each element as mentioned above may be kept in proper repair and in operating condition. A pipe-walker should be placed in charge of each district. The duties of the walker would be to cover the path or right-of-way of the pipe-lines and conduits each day, note what damage, if any, has occurred since his previous report. He should make all minor repairs. Serious trouble should be reported to the superintendent. The walker should operate all valves and gates under the direct order of the superintendent. He should also keep the head-gates and tunnels free from debris and foreign material, and take precautions to protect the conduits and canals from threatened land slides or washouts.

Bureau of Sales and Accounting. This bureau should be under the direct charge of the superintendent of sales and accounting, who reports directly to the hydraulic engineer. His duties are to see that

1. Auditing of accounts is done properly.
2. Accounts are collected and receipts given.
3. Applications for services are issued and complaints are properly taken care of.
4. An inventory of property is taken.

The auditor should keep all books relating to the Department of Water, keep a check upon the finances and take charge of accounts either receivable or payable. He should prepare a monthly statement for the manager showing the condition of the finances of the department. All money for water bills is received by the collector, who turns over all delinquent bills to the auditor.

The section of applications and complaints makes out contracts for water, issues orders for service installation, gives information to the public pertaining to the water system, hears complaints, reads meters and issues repair orders for those in a faulty condition, inspects house-services and issues notices to those who are wasting water on account of leaky fixtures, investigates the system for the purpose of determining whether water is being used illegally, or if the department is receiving the proper revenue for water served.

The section of property and statistics accounts for material received or disbursed, takes inventory of material in stock, keeps detailed statistics of pipes, valves, fittings and other material in the various structures of the water department, inspects the distributing system and sees that repair orders are issued for leaky or faulty hydrants, valves, or other fixtures that may be noticed by the inspector, issues requests for requisition for new stock as needed.

Bureau of Distribution. The Bureau of Distribution is under the direct charge of the superintendent of distribution who in turn has under him a foreman of operation, a foreman of services, and a foreman of construction. Requests should be made out for all stock needed

Generated on 2024-09-30 01:12 GMT / https://hdl.handle.net/2027/uiug.30112007838425
Public Domain, Google-digitized / http://www.hathitrust.org/access_use#pd-google
Digitized by Google
Original from UNIVERSITY OF ILLINOIS AT URBANA-CHAMPAIGN

in order to supply the various foremen working under him with the necessary material. The superintendent should keep account of orders issued for stock and see that the same is delivered in ample time. He should advise the various section foremen as to the most efficient methods of pursuing their work, and report to his superior the progress of all work under his supervision.

The foreman of operation should have charge of machine shop, meter and other repair, blacksmith and carpenter work, department stables, storage yard and pumping plants within the city.

The foreman of services has charge of the installation of screwed pipe, including service connections and extensions. The tapping of the mains, lead connections and the installation of meters is performed under his direct orders. Standpipes for hose connection, public fountains, and watering troughs are placed under the immediate direction of this foreman. Repairing of leaks is also done by the foreman of services, except large breaks in the cast iron mains, which may be done by the foreman of construction.

The foreman of construction, when the size of the department requires the services of a man in this capacity, has charge of the laying of cast-iron pipe and all other distributing mains. The cleaning and repair of reservoirs and standpipes should be performed by the foreman of construction. In cities of small population the duties of the foreman of services, foreman of construction, and even the foreman of operation may be performed by one man. In cities of 40,000 population or under there is generally no foreman of operation or services and no superintendent of distribution. The hydraulic engineer or some similar official acts as manager, issuing his orders direct to one man who acts in the capacity of superintendent of distribution, foreman of operation, services, and of construction.

Advisory Division. The Advisory Division should be in charge of the attorney for the water department.

He will pass upon contracts and specifications prepared by the division of engineering, try lawsuits in behalf of the Department of Water, pass upon land titles and sales, prepare all legal documents, and advise the manager as to legal methods of procedure. The attorney shall be chairman of the Advisory Board, which consists of the attorney, the hydraulic engineer, and the secretary. Its duties are:

1. To advise the manager as to the best methods of procedure when requested.
2. To pass upon the advisability of initiating lawsuits.
3. To decide upon the best method of settling damage claims.
4. To pass upon claims presented by contractors to the department.
5. To decide such other matters as the manager may bring before the board. The land agent shall have charge of the buying, listing, specifying, and selling of all lands owned or leased by the Department of Water, and shall obtain rights-of-way when so ordered through the attorney by the manager.

EXPLOSIVES USED IN THE UNITED STATES DURING 1915

During 1915, 197,722,300 lb. of black powder was used in the United States. Of this amount, 167,513,950 lb. was used for coal mining, 6,736,500 lb. for other mining, and 7,246,725 lb. for railway and other construction work. During the same period, 235,828,587 lb. of dynamite and other high explosives was used, 22,384,025 lb. for coal mining, 109,128,966 lb. for other mining, 22,279,699 lb. for railway and other construction work, and 82,035,897 lb. for all other purposes. The total amount of permissible explosives used was 27,349,909 lb., 21,841,659 lb. for coal mining, 4,687,510 lb. for other mining, 139,843 lb. for railway and other construction work, and 680,897 lb. for all other purposes. Permissible explosives, according to the U. S. Bureau of Mines, include ammonium nitrate explosives, hydrated explosives, organic nitrate explosives, and certain nitro-glycerin explosives containing an excess of free water or carbon. All permissible explosives have passed certain tests of the Bureau and are not to be regarded as permissible unless used in the manner specified. The use of black powder is decreasing, and that of high and permissible explosives increasing.

Mowing machines for cutting weeds on canal banks are being used on the Salt River project of the U. S. Reclamation Service. The main point in purchasing a new mower is to get a machine with the greatest downward drop to the cutting bar so that weeds on sloping banks can be mowed satisfactorily. Machines can be used on canal banks when the slope does not exceed 45°. They cannot be operated on banks where there is trash or heavy brush. Mowing should be done in the early part of the season when the weeds are tender and standing straight. One machine working under normal conditions will do as much work as 8 to 14 men using scythes, and at considerably less expense.

The amount of water delivered by a hydraulic ram may be computed from the formula $q = \frac{Qfk}{h}$ where q is the quantity of water delivered, f the fall in the drive-pipe, Q the quantity of water supplied, k a constant ranging between 0.60 and 0.66, and h the delivery head. The proper length of the drive-pipe may be computed from the following formula, given by the Rife Hydraulic Engine Co. $L = h\ (n - \frac{0.002}{f})$, in which $n = 0.12$ when $\frac{h}{f}$ is 10 or less, and $n = 0.08$ when $\frac{h}{f}$ is between 10 and 20. When $\frac{h}{f}$ is more than 20 the formula does not hold.

The annual death-rate from typhoid fever in California has decreased from 32.3 per 100,000 in 1906 to 9.7 per 100,000 in 1915. During the same period the death-rate from malarial fever decreased from 5.5 to 1.6 per 100,000.

Generated on 2024-09-30 01:13 GMT / https://hdl.handle.net/2027/uiug.30112007838425
Public Domain, Google-digitized / http://www.hathitrust.org/access_use#pd-google
Digitized by Google
Original from UNIVERSITY OF ILLINOIS AT URBANA-CHAMPAIGN

Industrial Progress

AUTOMATIC GATES FOR LAND-DRAINAGE SYSTEMS

The drainage of land can usually be accomplished by a simple system of small ditches emptying into a larger main ditch, which, in turn, drains into some natural channel, either directly or into a sump from which the water is elevated to the channel by a pumping plant. It frequently happens, however, that the amount of water to be drained is so great that it rises and flows back over the land to be drained. To avoid such objectionable conditions, a system such as is described below, should be constructed.

A typical cross-section is shown in Fig. 1. The two collecting ditches are connected with the main ditch at convenient intervals by means of corrugated iron pipes. The bottom of the main canal is, of course, lower than the bottom of the collecting ditches. Control of the flow from the collecting ditches to the main ditch is obtained by means of an automatic drainage-gate, such as is shown in Fig. 3. As long as the water in the main ditch is low, this gate stands open. When it rises to such a height that it would, if unhindered, flow back into the collecting ditches, the gate automatically closes, retaining the water in the main canal. The collecting ditches provide storage for the drainage water in addition to the main canal.

In case conditions are such that lateral ditches are also necessary, a similar system such as is shown in Fig. 2 can be used. The main drainage canal should be connected with the lateral ditches by means of corrugated pipe, using an automatic gate as already suggested for the collecting ditches shown in Fig. 1. Several small collecting ditches should be excavated, connecting the lateral ditches. The water will flow from the collecting ditches through the laterals and into the main canal. When the water in the canal rises too high, it will be prevented by the automatic gate from flowing back into the lateral ditches.

Fig. 1

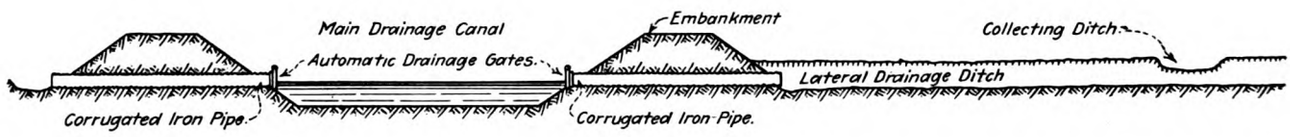

Fig. 2

SKETCHES OF PROPOSED DRAINAGE SYSTEMS.

FIG. 3. THE CALCO AUTOMATIC DRAINAGE GATE.

Automatic gates with corrugated pipe are also used where the main drainage canal is carried through a levee to a natural channel, where high-water mark in the stream is above the banks of the canal. At normal stages of the stream, the drainage canal empties into it by gravity. During high-water periods, however, the gate closes automatically and prevents water from the stream entering the canal and flooding the adjacent land. In many cases where a gate of this type is required water is present. A Calco gate with the corrugated pipe can be assembled and lowered into place without difficulty in such a case.

Engineers' Note Book

CHART FOR COMPUTING EARTHWORK IN DITCHES AND CANALS

The left-hand side of the accompanying chart gives the amount of embankment in the two banks of a canal and the right-hand side the excavation. Thus for a canal 10 ft. wide on the bottom with 3-ft. banks 4 ft. wide, and the bottom of the canal 1.1 ft. below the ground surface, the excavation is 50 cu. yd. per 100 ft. The corresponding fill for the banks is 1.9 ft. and the embankment 110 cu. yd., requiring 60 cu. yd. of borrow, assuming that the material will neither shrink nor swell. Again, for a canal 8 ft. wide on the bottom, with 2.5 ft. banks 3 ft. wide and the bottom of the canal 1.5 ft. below the ground surface, the excavation is 60 cu. yd. per 100 ft. The corresponding fill for the banks is 1 ft. and the embankment 38 cu. yd., leaving 22 cu. yd. of waste. Other uses for the chart will suggest themselves to the irrigation engineer.

Generated on 2024-09-30 01:12 GMT / https://hdl.handle.net/2027/uiug.30112007838425
Public Domain, Google-digitized / http://www.hathitrust.org/access_use#pd-google
Digitized by Google
Original from UNIVERSITY OF ILLINOIS AT URBANA-CHAMPAIGN

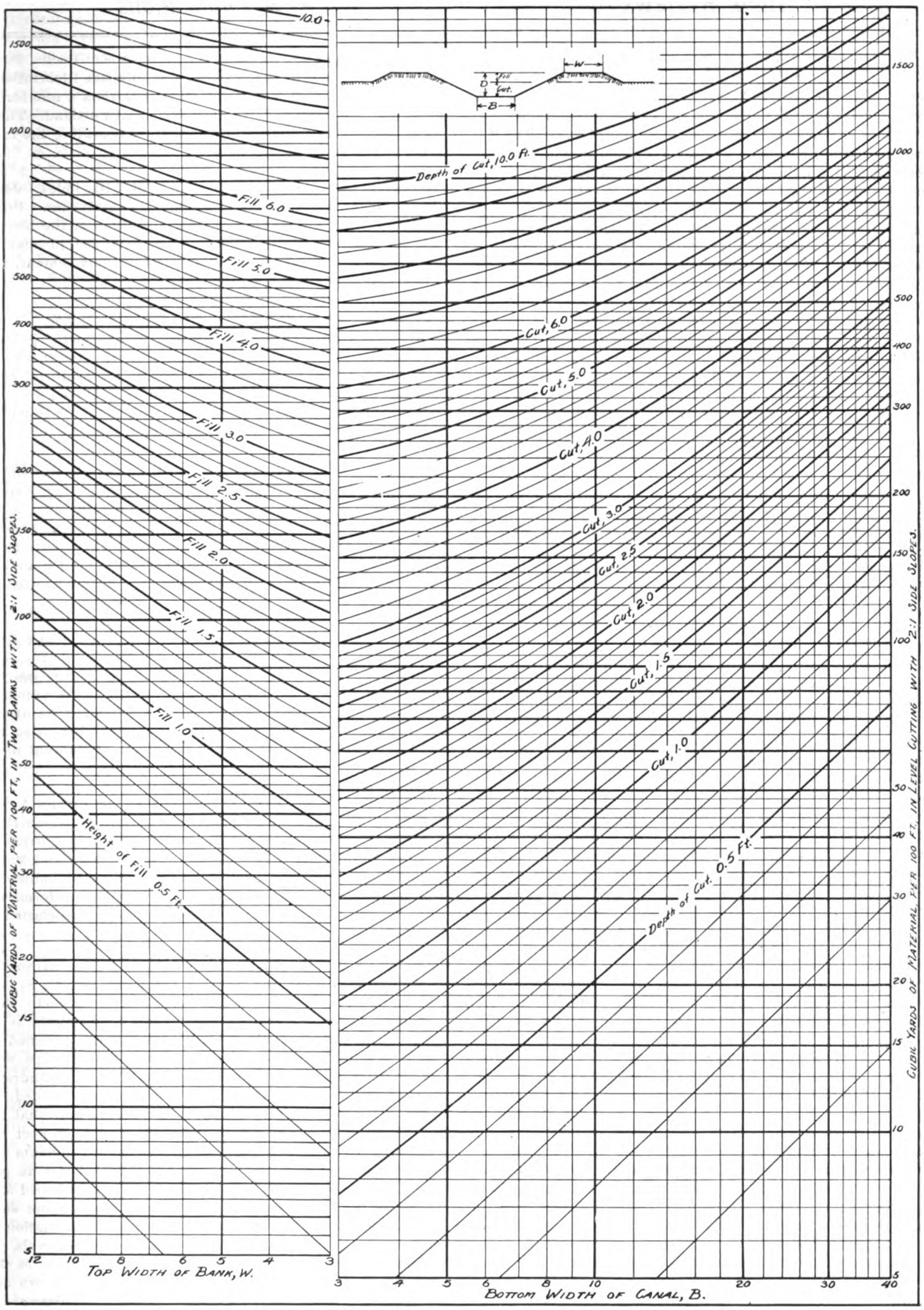

Generated on 2024-09-30 01:11 GMT / https://hdl.handle.net/2027/uiug.30112007838425
Public Domain, Google-digitized / http://www.hathitrust.org/access_use#pd-google
Digitized by Google
Original from UNIVERSITY OF ILLINOIS AT URBANA-CHAMPAIGN

Book Reviews

WATERWORKS HANDBOOK. Compiled by Alfred D. Flinn, Robert Spurr Weston, and Clinton L. Bogert. P. 801. Ill., index. McGraw-Hill Book Co., Inc., New York. For sale by *Mining and Scientific Press*, San Francisco. Price, $6.

This is one of the best general reference books that has ever been published upon the subject. The authors are all well-known hydraulic engineers, and they have drawn freely upon published data as well as their own wide experience. The result is a volume that will be invaluable to waterworks engineers, and of great interest to all members of the profession. In a book written by engineers whose main work has been in humid regions, it frequently happens that the special problems characteristic of arid or semi-arid regions receive a perfunctory treatment. This is not the case with the present volume, which treats all aspects of waterworks engineering with equal thoroughness. Even the headings of the chapters are too numerous to mention here, but the major divisions of the book are as follows: Sources of Water Supply, Collection of Water, Transportation and Delivery of Water, Distribution of Water, and Character of Treatment of Water. The book is well illustrated and there are many useful tables and diagrams, some of which are published for the first time.

HANDBOOK FOR HIGHWAY ENGINEERS. By Wilson G. Harger and Edmund A. Bonney. Second edition. P. 603. Ill., index. McGraw-Hill Book Co., New York. For sale by *Mining and Scientific Press*, San Francisco. Price, $3.

Sufficient advance has been made in highway engineering in the four years since the first appearance of this book to justify a second edition. Part I deals with theory of design, the chapter-headings being Grades and Alignment, Sections, Drainage, Foundations, Top Courses, Materials, and Minor Points. Part II is devoted to practical considerations, the chapter-headings being The Survey, Office Practice, Cost Data and Estimates, Notes on Construction, and Specifications. There is also an appendix containing traffic regulations in Ohio and New York. The chapter on cost data comprises about 70 pages and is fairly complete regarding pavements, but contains practically no information about costs of excavation. Since excavation for highways differs in many respects from other kinds of excavation and there is very little data regarding it in the ordinary handbooks, it would seem that more information upon this point should have been given. The contents of the chapters on surveying and office work is mainly an adaptation of familiar railroad methods to highway work. The same might be said of a large part of the notes on construction. The remainder of this chapter is devoted to different types of pavement, including hassam concrete, plain cement concrete, and brick. The chapter on specifications comprises about 80 pages and covers excavation, foundations, pavement, and the various minor structures. The usual mathematical tables are included in the book, besides a number of other tables of particular value to highway engineers. The principal defect of the book is what might almost be called its provinciality. Except for the traffic regulations of Ohio, already mentioned, there seems no recognition of any place west of the Alleghanies, while nearly all the material is taken from New York practice. Some general statements are made without qualification which are not correct for most of the country. This is natural since the authors are both connected with the New York State Department of Highways, but it seriously interferes with the usefulness of the book to an engineer whose work happens to be in some other region. Nevertheless, considering the dearth of up-to-date books on highway engineering, it is probable that many engineers, whatever their residence, will find the present volume of value.

New Publications

ANNUAL REPORT OF THE COMMISSION OF PUBLIC DOCKS, PORTLAND, OREGON. P. 47, with a number of full-page illustrations. The principal portion of this pamphlet comprises a number of maps and photographs of the dock system at Portland. There is also considerable statistical information regarding the commerce of the port.

HYDRATED LIME. By E. W. Lazell. P. 90. Ill., index. Jackson-Remlinger Printing Co., Pittsburg, Pennsylvania. Price, 30 cents. Gives a brief but complete discussion of the history and manufacture of this material, and its use in making plaster and mortar, either alone or with portland cement, and in making concrete with portland cement.

ELEMENTS OF CHART MAKING. By E. Lester Jones. P. 15, with 31 full-page plates. U. S. Coast and Geodetic Survey, Washington, D. C. This is a description, by the superintendent of the U. S. Coast and Geodetic Survey of the field and office methods necessary for making the charts prepared by that body. While the treatment is non-technical, there is much information included that will interest the engineer.

STRENGTHS OF WEBS OF I-BEAMS AND GIRDERS. By Herbert F. Moore and W. M. Wilson. Bulletin 86, Engineering Experiment Station, University of Illinois, Urbana, Illinois. Price, 30 cents. Describes a number of tests made on 12-in. I-beams having the webs planed down to a thin section and 24-in. built-up girders having thin webs. The importance of stiffeners is shown and a formula is developed for the buckling strength of webs.

A BAY CITIES WATER DISTRICT. Transactions of the Commonwealth Club of California, Vol. XI, No. 3. P. 76. The Commonwealth Club, San Francisco, California. Gives the full text of the bill proposed by a committee of the Commonwealth Club to permit the formation of a water district among the municipalities adjacent to San Francisco bay, also the statistical data presented and the discussion at a recent meeting of the club.

PROCEEDINGS OF THE 13TH ANNUAL CONVENTION OF THE AMERICAN ROAD BUILDERS' ASSOCIATION. P. 264. The American Road Builders' Association, 150 Nassau street, New York. Price $2. This convention was held at Pittsburg in February and March of this year. The usual road topics were discussed, mainly by prominent highway engineers, but very little new information was brought out. A list of members of the Association is included.

PETROLEUM WITHDRAWALS AND RESTORATIONS AFFECTING THE PUBLIC DOMAIN. By Max W. Ball. Bulletin 623, U. S. Geological Survey. P. 427, with nine large maps in pocket. Most California operators regard the petroleum withdrawals as an invention of His Satanic Majesty particularly designed to plague the California oil-man. A perusal of the maps with this bulletin shows that there are much larger withdrawn areas in other States, although most of the land included has never been prospected by drill. The text also shows that the original purpose of the withdrawal idea was to protect the operator from agricultural and other fraudulent claimants and also from the necessity of drilling his claim as fast as possible to 'get ahead of the other fellow.' It is to be hoped that legislation will be enacted so that this original purpose shall be accomplished. The bulletin contains a brief discussion of oil-land law and a complete history of the withdrawals, including all orders and official correspondence. There is also an index by township and range of all lands withdrawn and restored. The maps show all lands at present withdrawn.

Generated on 2024-09-30 01:21 GMT / https://hdl.handle.net/2027/uiug.30112007838425
Public Domain, Google-digitized / http://www.hathitrust.org/access_use#pd-google
Digitized by Google
Original from UNIVERSITY OF ILLINOIS AT URBANA-CHAMPAIGN

U. S. Geological Survey, Washington, D. C., 1916:

GYPSUM IN 1915. By Ralph W. Stone. P. 9.

TRIANGULATION IN CALIFORNIA, 1913-1915. Bulletin 644-C. P. 60. Ill., index.

ASPHALT, RELATED BITUMENS, AND BITUMINOUS ROCK IN 1915. By John D. Northrop. P. 16. Chart.

POSSIBILITIES OF OIL AND GAS IN NORTH-CENTRAL MONTANA. By Eugene Stebinger. Bulletin 641-C. P. 42. Maps.

AN ANTICLINAL FOLD NEAR BILLINGS, NOBLE COUNTY, OKLAHOMA. By A. E. Fath. Bulletin 641-E. P. 18. Map.

STRUCTURE OF THE VICKSBURG-JACKSON AREA, MISSISSIPPI. With special reference to oil and gas. By Oliver B. Hopkins. Bulletin 641-D. P. 28. Maps.

THE LIGNITE FIELD OF NORTH-WESTERN SOUTH DAKOTA. By D. E. Winchester, C. J. Hares, E. Russell Lloyd, and E. M. Parks. Bulletin 627. P 169. Ill., maps, charts, index.

U. S. Bureau of Mines, Washington, D. C., 1916:

GAS ANALYSIS AS AN AID IN FIGHTING MINE FIRES. By G. A. Burrell and Frank M. Sibert. Technical paper 13. P. 16. Illustrated.

QUANTITY OF GASOLINE NECESSARY TO PRODUCE EXPLOSIVE CONDITIONS IN SEWERS. By G. A. Burrell and H. T. Boyd. Technical paper 117. P. 17. Illustrated

EFFECTS OF TEMPERATURE AND PRESSURE ON THE EXPLOSIBILITY OF METHANE-AIR MIXTURES. By G. A. Burrell and J. W. Robertson. Technical paper 121. P. 14. Illustrated

COKE-OVEN ACCIDENTS IN THE UNITED STATES IN 1915. Compiled by Albert H. Fay. Technical paper 151. P. 17. Out of 31,060 employed 38 were killed, a decrease.

PRODUCTION OF EXPLOSIVES IN THE UNITED STATES IN 1915. With notes on coal-mine accidents due to explosives, and a list of permissible explosives, lamps, and motors tested. Compiled by Albert H. Fay. Technical paper 159. P. 24.

REGULATIONS COVERING COAL-LAND LEASES IN ALASKA. Approved May 18, 1916. Information regarding coal lands. P. 86. Maps. Department of the Interior, Washington, D. C., 1916.

Civil Service Examinations

UNITED STATES CIVIL SERVICE COMMISSION

EXPLOSIVES CHEMIST, September 12. Ordnance Department, Frankford Arsenal, Philadelphia. Salary, $3000. Competitors will not be assembled for examination. Applicants must have graduated in chemistry from a technical school and have had five years' experience in handling, testing, and manufacture of explosives. Age under 40. Application form 2118.

COMPUTER, COAST AND GEODETIC SURVEY, September 13-14. Applicants will be examined in pure mathematics and practical computations. Age 20 and over. Application form 1312. Usual places of examination.

MACHINIST, October 1. Navy Yard, Washington, D. C. Non-educational examination. Salary, $3.28 to $4.24 per day. High-grade machine work in manufacture of ordnance materials. Application form 1800, which may be obtained from the Labor Board, Navy Yard, Washington, D. C. Form should be filed before September 16.

AID, BUREAU OF STANDARDS, October 11-12. Salary, $600 to $720. Applicants must be high school graduates. Age 19 to 24. Application form, 1312. Usual places of examination.

MECHANICAL DRAFTSMAN, October 11-12. Panama Canal Service. First-class draftsmen must have had three years' drafting experience and some shop experience. Second-class draftsmen must have had two years' drafting experience or one year shop and one year drafting-room. Graduation from a technical school will count as two years' experience in both cases. Age 20 to 45. Usual places of examination.

CALIFORNIA STATE CIVIL SERVICE COMMISSION

SUPERINTENDENT OF CONSTRUCTION. Architectural Division of State Department of Engineering. Candidates should have had ten years' experience in general engineering work and should be skilled in either hydraulic or mechanical engineering. Salary $2400 at commencement and $3000 maximum.

ASSISTANT STATE ENGINEER. Candidates should have had ten years' experience in general engineering work and should be skilled in civil and hydraulic engineering. Salary $3000. The written test for both these examinations will be held September 23 at San Francisco, Sacramento, and Los Angeles. Candidates who have obtained a satisfactory average on the written test will meet the examining board in San Francisco for an oral interview. The written test will be given a weight of 25, experience 40, and the interview, 35. Application form No. 2.

Engineering Societies

IDAHO SOCIETY OF ENGINEERS. Ira F. Schaffner, secretary, Boise.

Los Angeles Section of AMERICAN SOCIETY OF MECHANICAL ENGINEERS. Ford W. Harris, secretary, 1029 Higgins building.

Los Angeles Section of AMERICAN INSTITUTE OF ELECTRICAL ENGINEERS. Edward Woodbury, secretary, 255 East 3rd street.

OREGON SOCIETY OF ENGINEERS. Orrin E. Stanley, secretary, room 409, City Hall, Portland.

Portland Section, AMERICAN INSTITUTE OF ELECTRICAL ENGINEERS. Paul Lebenbaum, secretary, 45 Union Depot.

Portland Association of Members of AMERICAN SOCIETY OF CIVIL ENGINEERS. Charles McGonigle, president, care Western Sheet Metal Works.

San Francisco Association of Members of AMERICAN SOCIETY OF CIVIL ENGINEERS. E. T. Thurston, Jr., secretary, Mechanics Institute building.

San Francisco Section of AMERICAN SOCIETY OF MECHANICAL ENGINEERS. Carl F. Braun, secretary, Hooker & Lent building.

San Francisco Section of AMERICAN INSTITUTE OF ELECTRICAL ENGINEERS. A. G. Jones, secretary, 811 Rialto building.

Southern California Association of Members of AMERICAN SOCIETY OF CIVIL ENGINEERS. W. K. Barnard, secretary, 701 Central building, Los Angeles.

The regular bi-monthly meeting of the San Francisco Association of Members of the AMERICAN SOCIETY OF CIVIL ENGINEERS was held August 15. George L. Dillman delivered a non-technical address on 'The Chief Cause of Trouble and the Basic Reason for Human Progress.' Charles Evan Fowler, of Seattle, who was in the city in connection with the hearings on the San Francisco-Oakland bridge, gave a brief talk on bridges illustrated with lantern slides. Among the other visiting members of the Society who addressed the Association briefly were E. E. Howard of Kansas City, Missouri, and W. J. Watson of Cleveland, Ohio.

UTAH SOCIETY OF ENGINEERS. Hugh C. Lewis, secretary, Capitol building, Salt Lake City, Utah.

Coming Conventions

AMERICAN ELECTRIC RAILWAY ASSOCIATION. Annual convention, Atlantic City, New Jersey, October 9-13. E. B. Burritt, secretary, 8 West 40th street, New York.

AMERICAN GAS INSTITUTE. Annual meeting, Chicago, October 17-20. G. G. Ramsdell, secretary, 29 West 39th street, New York.

AMERICAN INSTITUTE OF METALS. Annual meeting, Cleveland, Ohio. Week of September 11. W. M. Corse, secretary, 106 Morris avenue, Buffalo, New York.

AMERICAN PEAT SOCIETY. Annual meeting, Washington, D.

Generated on 2024-09-30 01:12 GMT / https://hdl.handle.net/2027/uiug.30112007838425
Public Domain, Google-digitized / http://www.hathitrust.org/access_use#pd-google
Digitized by Google
Original from UNIVERSITY OF ILLINOIS AT URBANA-CHAMPAIGN

C., September 21-23. Julius Bordello, secretary, Kingsbridge, New York.

AMERICAN SOCIETY OF MUNICIPAL IMPROVEMENTS. Annual convention, Newark, New Jersey, October 9-13. Charles C. Brown, secretary, Indianapolis, Indiana.

ILLUMINATING ENGINEERING SOCIETY. Annual convention, Philadelphia, September 18-20. C. D. Fawcett, assistant secretary, 29 West 39th street, New York.

Personal

CHARLES EVAN FOWLER was in San Francisco during August in connection with his proposed San Francisco-Oakland bridge.

SIMON BAMBERGER, builder and principal owner of the Salt Lake & Ogden railroad, is the Democratic candidate for governor of Utah.

PAUL E. KRESSLY has been appointed city engineer of Newport Beach, California, succeeding I. B. FUNK, resigned. Mr. Kressly is also city engineer of Chino.

JOSEPH A. WEST, formerly chief engineer for the Ogden, Logan & Idaho railway, has been appointed chief engineer for the Sumpter Valley Railroad of Oregon.

C. E. GRUNSKY has been re-elected to membership of the executive committee of the Pacific division of the American Association for the Advancement of Science.

E. D. GRIFFITH, formerly testing engineer for the California State Department of Engineering has been appointed testing engineer for the State Purchasing Department.

A board of advisory engineers composed of W. F. MCCLURE, C. E. GRUNSKY, and G. E. ANDERSON has been appointed by the directors of the Imperial Valley irrigation district.

CHARLES F. KEEFE, of Martinez, California, has gone to Venezuela, to take charge of the construction of an oil refinery for a company which is affiliated with the Shell Oil Company.

PAUL E. KRESSLY has been appointed city engineer of Chino, California, where he will have charge of expenditure of about $75,000 for street paving, funds for which were voted recently.

MYRON H. PECK has been appointed second lieutenant in the first company of engineers of the National Guard of California. This company has been mustered into the regular army.

ELLWOOD MEAD, E. G. HOPSON, and H. A. TRUE, JR., have been appointed to investigate the possibilities of Federal and State co-operation in irrigation development at Green River, Wyoming.

F. H. KNICKERBOCKER has been appointed general superintendent of the Oregon Short Line, succeeding W. A. WHITNEY, who resigned to become superintendent of transportation for the Union Pacific railroad.

W. R. HAMILTON, formerly manager for the Montebello Oil Co. and affiliated companies, has resigned and will engage in general consulting work in connection with petroleum and metal mining with offices in the Hobart building, San Francisco.

A committee of consulting engineers, composed of FREDERICK STEARNS, WILLIAM MULHOLLAND, and R. H. THOMPSON, has reported that it will be possible to seal the Cedar River impounding basin, which is part of the municipal power system at Seattle.

The Commonwealth Club of California has appointed a water-power committee composed of CHARLES D. MARX, chairman, H. E. LINDEN, F. G. BAUM, A. E. CHANDLER, W. R. JOHNSTONE, FRANK R. DELVIN, PAUL A. SINSHEIMER, A. H. HALLORAN, H. C. HARMS, W. F. MCCLURE, and M. M. O'SHAUGHNESSY.

AUSTIN B. FLETCHER, chief engineer for the California State Highway Commission, has been granted a six weeks' leave of absence, commencing August 16, to assist the Department of Agriculture in organizing the bureau that will have charge of the expenditure of the Federal funds appropriated under the Bankhead bill.

Commercial Paragraphs

The PELTON WATER-WHEEL CO. has issued bulletin No. 9, describing the Pelton-Doble centrifugal pumps.

E. R. Marker has been appointed district manager for Wisconsin for the T. L. SMITH CO., with headquarters at Milwaukee.

CLARK & HENERY CONSTRUCTION CO., of Sacramento and Stockton, California, will establish a branch paving plant at Oakland.

The INGERSOLL-RAND CO. has recently published three booklets on 'Steam Condensing Plants,' 'The Leyner Drill Sharpener,' 'Imperial Duplex Steam-Driven Compressors.'

The SPRAY ENGINEERING CO. of Boston, Massachusetts, has recently issued three booklets, namely: 'Spraco System for Cooling Condensing-Water,' 'Cooling-Water for Ice Plants,' 'Vaughan Flow Meter.'

In Price List No. 65 the CHAIN BELT CO., of Milwaukee, gives the cost of its 'Mogul'-steel bushed chain-belt, 'Durex' combination chain-belt, malleable iron elevator-buckets, and sprocket-wheels for detachable chain-belt.

The GENERAL ELECTRIC CO. has issued bulletin No. 45,603 describing the company's graded shunt-resistance multigap lightning arresters for alternating-current constant potential circuits, and bulletin No. 47,100 describing its truck-type safety-first switchboards.

The UNION IRON WORKS is now building a steamer for the Matson Navigation Co. for use in the sugar trade in the Hawaiian Islands. A feature of the equipment is a Kinney rotating-plunger pump driven by a 50-hp. General Electric motor, which is to be used for handling molasses.

The SULLIVAN MACHINERY CO., of Chicago and London, has established an agency in Holland with Messrs. Petrie & Co., Heerengracht, 141-145 Amsterdam, as its special representatives, who will sell the Sullivan products in the Netherlands. This new arrangement replaces the Sullivan agency previously at the Hague.

The PETROLEUM RECTIFYING CO. of California has acquired the U. S. patents for the dehydration of oil formerly owned by the Raney-Laird Petroleum Dehydrating Co. It is stated by Ford W. Harris, their attorney, that the Petroleum Rectifying Co. now controls practically all patents on dehydration of oil by the use of electrical discharges.

In its instruction book No. 16, of 144 pages, the SMOOTH-ON MANUFACTURING CO. of Jersey City, N. J., tells all about Smooth-On iron cements, iron paints, and corrugated iron gaskets. The cements are chemically prepared iron compounds sold in powdered form, and used by mixing with water to the consistence of putty. All manner of repairs may be effectively made by its use. We advise engineers to secure a copy of this useful work.

An interesting 9-page pamphlet entitled, 'Why Highly Oxidized Red Lead is Superior,' by G. W. Thompson, chief chemist of the NATIONAL LEAD CO., has been published by that concern. For centuries red lead, Pb_3O_4, has been used in paints for the preservation of iron and steel. The percentage of true red lead in red lead varies from 70 to 100. Anything under 100% is considered a mixture of red lead an unconverted oxide of lead, litharge, from which red lead is made. Much progress has been recorded in the manufacture of red lead in the last 25 years. One is an increased percentage of true red lead, another is that red leads are finer from better grinding. Notes on painting, quantities used, and results are given.

Generated on 2024-09-30 01:13 GMT / https://hdl.handle.net/2027/uiug.30112007838425
Public Domain, Google-digitized / http://www.hathitrust.org/access_use#pd-google
Digitized by Google
Original from UNIVERSITY OF ILLINOIS AT URBANA-CHAMPAIGN

Western Engineering

WEEKLY NEWS BULLETIN

WESTERN ENGINEERING *with* WEEKLY NEWS BULLETIN $4.50 per Year

SAN FRANCISCO, SEPTEMBER 4, 1916

SINGLE COPIES WEEKLY NEWS BULLETIN 15 Cents

Contracts Pending

Bids will be Received		See Issue of News Bulletin
Sept. 5.	Burlingame, Cal., Street Work	Sept. 4
Sept. 5.	Fresno, Cal., Building	Sept. 4
Sept. 5.	Los Angeles, Cal., Street Work	Sept. 4
Sept. 5.	Martinez, Cal., Street Work	Sept. 4
Sept. 5.	Sacramento, Cal., Street Work	Sept. 4
Sept. 5.	Stockton, Cal., Miscellaneous	Sept. 4
Sept. 6.	Auburn, Cal., Culverts	Sept. 4
Sept. 6.	Auburn, Cal., Road Work	Sept. 4
Sept. 6.	Roseburg, Ore., Railroad Work	Sept. 4
Sept. 6.	Gold Beach, Ore., Road Work	Sept. 4
Sept. 6.	Madera, Cal., Bridges	Aug. 28
Sept. 6.	San Francisco, Cal., Water Supply	Aug. 28
Sept. 6.	Santa Ana, Cal., Road Work	Aug. 28
Sept. 6.	Santa Barbara, Cal., Bridge	Sept. 4
Sept. 7.	Hanford, Cal., Road Work	Sept. 4
Sept. 7.	Portland, Ore., Heat	Aug. 28
Sept. 7.	Sacramento, Cal., Street Work	Sept. 4
Sept. 7.	Santa Barbara, Cal., Street Work	Aug. 28
Sept. 7.	Santa Barbara, Cal., Street Work	Sept. 4
Sept. 7.	Tracy, Cal., Street Work	Sept. 4
Sept. 7.	Ventura, Cal., River Work	Aug. 28
Sept. 7.	Ventura, Cal., Road Work	Aug. 28
Sept. 8.	Oroville, Cal., Bridges	Aug. 28
Sept. 8.	Placerville, Cal., Building	Sept. 4
Sept. 8.	Seattle, Wash., Street Work	Sept. 4
Sept. 8.	Ventura, Cal., Bridge	Aug. 28
Sept. 8.	Ventura, Cal., River Work	Aug. 28
Sept. 8.	Visalia, Cal., Bridge	Sept. 4
Sept. 8.	Visalia, Cal., Road Work	Sept. 4
Sept. 11.	Los Angeles, Cal., Light	Sept. 4
Sept. 11.	Los Angeles, Cal., Road Work	Sept. 4
Sept. 11.	Oakland, Cal., Bridge	Aug. 28
Sept. 11.	Redwood City, Cal., Bridge	Sept. 4
Sept. 11.	Salinas, Cal., Street Work	Sept. 4
Sept. 11.	Sandpoint, Ida., Road Work	Aug. 28
Sept. 11.	Visalia, Cal., Building	Sept. 4
Sept. 12.	Eureka, Cal., Bridges	Sept. 4
Sept. 12.	Eureka, Cal., Road Work	Sept. 4
Sept. 12.	Lindsay, Cal., Street Work	Aug. 28
Sept. 12.	Salt Lake City, Utah, Street Work	Aug. 28
Sept. 12.	Ventura, Cal., Bridge	Aug. 28
Sept. 12.	Ventura, Cal., Road Work	Aug. 28
Sept. 12.	Washington, D. C., Machinery and Supplies	Aug. 28
Sept. 12.	Washington, D. C., Supplies	Sept. 4
Sept. 13.	Oroville, Cal., Road Work	Sept. 4
Sept. 13.	San Francisco, Cal., Water Supply	Aug. 28
Sept. 14.	Santa Rosa, Cal., Bridge	Aug. 28
Sept. 14.	Santa Rosa, Cal., Culvert	Aug. 28
Sept. 15.	Crescent City, Cal., Road Work	Sept. 4
Sept. 15.	Los Angeles, Cal., Supplies	Aug. 28
Sept. 15.	Montrose, Colo., Irrigation	Aug. 28
Sept. 15.	Salinas, Cal., Bridge	Sept. 4
Sept. 15.	Salinas, Cal., River Work	Sept. 4
Sept. 15.	Salinas, Cal., Road Work	Sept. 4
Sept. 15.	San Francisco, Cal., Supplies	Aug. 28
Sept. 15.	Washington, D. C., Machinery	Sept. 4
Sept. 18.	Colfax, Wash., Road Work	Sept. 4
Sept. 18.	Hawthorne, Nev., Building	Aug. 28
Sept. 18.	Oakland, Cal., Road Work	Sept. 4
Sept. 18.	San Francisco, Cal., Water Supply	Sept. 4
Sept. 18.	San Jose, Cal., Building	Aug. 28
Sept. 18.	San Jose, Cal., Road Work	Aug. 28
Sept. 19.	Los Angeles, Cal., Buildings	Aug. 28
Sept. 19.	Pasco, Wash., Road Work	Aug. 28
Sept. 19.	Pasco, Wash., Road Work	Sept. 4
Sept. 20.	Denver, Colo., Supplies	Sept. 4
Sept. 20.	St. Ignatius, Mont., Irrigation	Aug. 28
Sept. 25.	San Bernardino, Cal., Bridge	Sept. 4
Sept. 27.	Malta, Mont., Irrigation	Sept. 4
Sept. 28.	Fort Laramie, Wyo., Irrigation	Sept. 4
Sept. 30.	Washington, D. C., Heat and Power	Aug. 28
Oct. 2.	Willows, Cal., Building	Aug. 28
Oct. 13.	Buenos Aires, Argentine Republic, Supplies	Sept. 4

Building Permits

In SAN FRANCISCO; $2500 and over in valuation.

AUGUST 25

One Story Frame Store—Cost $2800. C. J. Gross, owner. W Castro 225 N 19th.

Six Story Reinforced Concrete Store and Lofts—Cost $150,000. John A. Hooper, owner. W Battery 45-10 N Pine.

Two Story Frame Dwelling—Cost $3000. J. B. Spaeth and W. Bahrs, owners. E 15th Ave 235 N Anza.

Three Story Frame Tenements—Cost $38,000. E. G. Fisher, owner. NW Ashbury and Fell.

Three Story Frame Tenements—Cost $32,000. Marcus Marcussen, owner. W Jones 135 N Washington.

Three Story Frame Tenements—Cost $17,000. J. V. Campbell, owner. SE Baker and Golden Gate.

Three Story Frame Residence—Cost $20,000. J. R. Hanify, owner. N Vallejo 206-3 E Divisadero.

AUGUST 26

Three Story Frame Flats—Cost $7000. Arthur and Amelia Devoto, owners. N Vallejo 25 E Leavenworth.

Two Story Class 'C' Auto Salesroom—Cost $16,500. Lawrence A. Myers, owner. N California 100 E Van Ness.

AUGUST 28

Dwelling Alterations—Cost $3000. Mission Dolores Church, owner. No. 3321 16th St.

Two Story Frame Flats—Cost $4000. Thos. Hamill, owner. S Clement 107-6 E 17th Ave.

Two Story Frame Flats—Cost $3400. John F. Haner, owner. W 5th Ave 100 N Clement.

Two Story Frame Dwelling—Cost $2950. Nelson, owner. E 21st Ave 50 S Anza.

AUGUST 30

One and One-Half Story Frame Dwelling—Cost $2250. R. Chiosso, owner. W Oakwood 252 S 18th.

One Story Class 'A' Annex for Banking Room—Cost $8500. Bank of Italy, owners. E Montgomery 59-6 S Clay.

Generated on 2024-09-30 01:13 GMT / https://hdl.handle.net/2027/uiug.30112007838425
Public Domain, Google-digitized / http://www.hathitrust.org/access_use#pd-google
Digitized by Google
Original from UNIVERSITY OF ILLINOIS AT URBANA-CHAMPAIGN

Construction News

STREET AND ROAD WORK

Auburn, Cal.—Bids will be received until September 6 by city clerk for construction of concrete pavement with asphaltic wearing surface on state highway through city.

Berkeley, Cal.—Contract for construction of concrete sidewalks on University avenue and on San Pablo avenue has been awarded to Oakland Paving Co., 5000 Broadway, Oakland.

Contract for grading and construction of redwood curbs, concrete gutters, and macadam pavement on Franklin street has been awarded to Oakland Paving Company.

Burlingame, Cal.—Bids will be received until September 5 by J. R. Murphy, city clerk, for construction of concrete pavement with topeka wearing surface, and a reinforced concrete culvert on Elm avenue.

Colfax, Wash.—Bids will be received until September 18 by A. R. Metz, county auditor, for construction of 11 miles of permanent highway.

Crescent City, Cal.—Bids will be received until September 15 by W. L. Nichols, county clerk, for construction of highway and culverts near Smith River bridge.

Eureka, Cal.—Bids will be received until September 12 by Fred M. Kay, county clerk, for construction of ½ mile of highway near Upper Mattole post-office.

Glendale, Cal.—Contract for construction of macadam pavement and concrete curbs, gutters, and sidewalks on Canada boulevard has been awarded to Rogers Bros. Co., 506 Hibernian Bdg., Los Angeles, for $57,800.

Globe, Ariz.—Contract for construction of five miles of concrete pavement on Globe-Miami highway has been awarded to Tri-State Construction Co., El Paso, Texas, for $56,647.55.

Contract for construction of 1.3 miles of concrete pavement on Winkelmann-Hayden highway has been awarded to Tri-State Construction Co. for $12,329.92.

Gold Beach, Ore.—Bids will be received until September 6 by J. R. Stannard, county clerk, for construction of Chetco highway.

Hanford, Cal.—Bids will be received until September 7 by Board of Supervisors for construction of about 16 miles of county highway, east and south of Guernsey and north and west of Corcoran. Work includes 18,000 cu. yd. of excavation, 81,400 lin. ft. of either 1½-in. topeka or warrenite wearing surface on 2½-in. asphaltic concrete base, or 4-in. asphaltic concrete pavement and 300 ft. of guard fence. Alternate bids will be received on 15 and 16-ft. pavement. Plans from County Highway Commission upon payment of $5 or may be seen at office of Western Engineering.

Huntington Beach, Cal.—Bids will be received until September 4 by Charles R. Nutt, city clerk, for improving 17th street.

Lewiston, Ida.—Contract for improvement of several streets has been awarded to C. M. Payne, Spokane, Wash., for about $10,000.

Los Angeles, Cal.—Board of Public Works will receive bids until September 5 for construction of concrete pavement, cement curbs, and vitrified pipe sewers on Carolina street.

Bids will be received until September 11 by Board of Supervisors for construction of 2.94 miles of concrete pavement on disintegrated granite base in road improvement district No. 94. County furnishes cement, gravel, granite, and oil. Estimated cost is $21,473.54.

Bent Bros., Central Bdg., were low bidders at $127,137.08 for construction of 10.63 miles of concrete pavement on Mint Canyon highway, the contractor to operate the county quarry to obtain material. On the proposal for the county to operate the quarry, Rogers Bros. Co. was low bidder at $125,015.51.

Contract for construction of concrete sidewalks, curbs, and gutters on New Terrace tract has been awarded to Will F. Peck, 4568 Finley avenue.

Mabton, Wash.—Contract for construction of one mile of highway has been awarded to O. F. Leonard for $3685.

Martinez, Cal.—Bids will be received until September 5 by C. E. Daley, city clerk, for grading and construction of concrete sidewalks on several streets.

Oakland, Cal.—Bids will be received until September 18 by George E. Gross, county clerk, for placing oil and screenings on county road No. 957 and county road No. 35.

Ogden, Utah.—City recorder is receiving bids for construction of five blocks of concrete pavement on Lincoln avenue.

Oroville, Cal.—Contract for construction of 3½ miles of highway west from Biggs has been awarded to Daniel Bayles, Biggs, for $6950.

Bids will be received until September 13 by C. F. Belding, county clerk, for improvement of several highways in road district No. 2.

Pasco, Wash.—Bids will be received until September 19 by county commissioners for construction of permanent highway No. 3.

Pullman, Wash.—Contract for paving several streets has been awarded to Washington Paving Co., Smith Bdg., Seattle, for $0.95 per sq. yd. for bituminous macadam or $16,000 in all.

Riverside, Cal.—Conner Contracting Co., Los Angeles, was low bidder at $10,136.20 for construction of concrete highway from point one mile from Prado to Orange County line. H. E. Cox Co. bid $12,226. All bids were rejected.

Sacramento, Cal.—State Highway Commission has accepted plans for highway from Ignacio to Greenpoint in Marin county. Call for bids will be issued soon.

Bids will be received until September 5 by M. J. Desmond, city clerk, for grading and construction of asphalt pavement and 8-in. sewer on alley between I and J streets.

Bids will also be received until the same time for construction of asphalt pavement and concrete gutters on Spafford avenue.

Bids will be received until September 7 for grading and construction of concrete sidewalks on M street.

Bids will also be received until the same time for construction of concrete sidewalks on T street.

Salinas, Cal.—Bids will be received until September 15 by T. P. Joy, county clerk, for improvement of highway at Elkhorn Slough crossing.

Bids will be received until September 11 by J. J. Kelly, city clerk, for grading and construction of concrete curbs and asphalt pavement on concrete base on Stone street.

Bids will also be received until the same time for similar work on Salinas street.

Contract for improvement of Riker street has been awarded to Dan McCormick at the following unit prices: grading, 1c. per sq. ft.; macadam pavement, 4c. per sq. ft.; combined concrete curb and gutter, 55c. per foot.

Salt Lake City, Utah.—Contract for construction of bitulithic pavement on several streets has been awarded to Strange & Maguire for $1.80 per sq. yd. of $31,019 in all. The ruling price for this type of pavement has been from $2.05 to $2.20 per square yard.

San Francisco, Cal.—Contract for grading Cabrillo street has been awarded to S. T. Johnson and J. H. Franks, 639 29th avenue, for $0.28 per cu. yd. or $8516.38.

Contract for paving 44th avenue has been awarded to Thomas A. Clark, 68 Post street, for $833.25.

Contract for construction of sidewalks on 12th avenue has been awarded to S. F. Johnson for $292.50.

Contract for improving Cabrillo street has been awarded to City Street Improvement Co., 166 Geary street, for $486.

Contract for construction of basalt pavement on Caselli avenue has been awarded to T. Gallagher for $1031.35.

Contract for improving Balboa street has been awarded to Owen McHugh, 304 Russ Bdg., for $11,840.55.

San Rafael, Cal.—Contract for construction of concrete sidewalks on several streets has been awarded to Mazotti & Bottini for 18c. per square foot.

Santa Barbara, Cal.—Bids will be received until September 7 by A. C. Holmberg, city clerk, for grading and construction of asphalt pavement, concrete gutters, and granite curbs on Chapala street.

Contract for grading 4.8 miles of Harris Station-Lompoc highway has been awarded to Robert Sherer & Co., 648 Pacific Electric Bdg., Los Angeles, for $18,570.

Santa Monica, Cal.—Contract for paving several alleys has been awarded to Frank Ockert at 2.67c. per square foot.

Seattle, Wash.—Board of Public Works will receive bids until September 8 for grading and construction of curbs and plank sidewalks on 60th avenue SW.

Bids will also be received until the same time for paving and construction of sewers on Olive street.

Bids will also be received until the same time for grading and construction of concrete sidewalks and wooden curbs and gutters on North 71st street.

Bids will also be received until the same time for construction of brick pavement and concrete curbs on Rainier avenue.

South Bend, Wash.—Contract for grading and macadamizing Columbia-North Bank highway and Chinook Depot highway has been awarded to E. L. Goulter for $6498.

Contract for construction of North Cove Extension highway has been awarded to Hendricks & Ward for $2922. Other bidders were: Allred & James, $3054.25; E. E. Hale, $3141.57; Willapa Construction Co., $3230.50; J. Johnson, $3325.87.

Tracy, Cal.—Bids will be received until September 7 by George L. Frerichs, city clerk, for grading, graveling, and con-

Generated on 2024-09-30 01:18 GMT / https://hdl.handle.net/2027/uiug.30112007838425
Public Domain, Google-digitized / http://www.hathitrust.org/access_use#pd-google
Digitized by Google
Original from UNIVERSITY OF ILLINOIS AT URBANA-CHAMPAIGN

struction of redwood curbs and concrete sidewalks on several streets.

Visalia, Cal.—Board of Supervisors will receive bids until September 8 for construction of three miles of Springville highway.

Wenatchee, Wash.—Chelan county will spend $10,000 on completion of Cascade highway.

SEWERS AND DRAINAGE

Berkeley, Cal.—Contract for construction of 6-in. sewers on Walnut street has been awarded to W. J. Tobin, 735 Filbert street, Oakland.

Chino, Cal.—Contract for construction of sewer system has been awarded to Lon Fleming & Sons, Pomona, for $30,953, using cement pipe.

Los Angeles, Cal.—Mike Chutuk, 1506 Pleasant street, was low bidder at $8818 for construction of sewers in San Fernando boulevard district.

Sacramento, Cal.—Contract for construction of 8, 10, and 24-in. sewers on several streets and alleys has been awarded to J. W. Terrell.

Santa Ana, Cal.—Formation of United storm-water district is proposed. Plans include construction of levee containing 300,000 cu. yd. of material, and driving 5200 piles. Total estimated cost is $125,000. Frank N. Gibbs, Anaheim, is interested.

BRIDGES AND CULVERTS

Auburn, Cal.—Bids will be received until September 6 by city clerk for construction of three concrete culverts across Auburn ravine.

Chico, Cal.—Contract for construction of bridge over Little Chico creek has been awarded to T. H. Polk for $4243.

Colusa, Cal.—Contract for construction of bridges No. 92 and 93 has been awarded to Hard Brothers.

Contract for construction of bridge No. 94 has been awarded to Schaad Brothers.

Contract for construction of bridge No. 95 has been awarded to Ward B. Esterly.

Eureka, Cal.—Bids will be received until September 12 by Fred M. Kay, county clerk, for construction of reinforced concrete bridge across Maple creek.

Bids will also be received until the same time for construction of highway bridge across Lost Man's creek.

Bids will be received until September 12 by Fred M. Kay, county clerk, for construction of reinforced concrete bridge across Reas creek.

Bids will be received until September 12 by Fred M. Kay, county clerk, for construction of bridge across north fork of Mattole river near Petrolia.

Hanford, Cal.—Contract for construction of several concrete culverts and bridges has been awarded to S. G. Smartt, Bakersfield, at $8 per cu. yd. for concrete and $0.01 per lb. for placing steel, or about $3600 in all. J. E. Hines bid $9.40 for concrete and $0.015 for steel. H. E. Walker bid $10 and $11 for concrete and $0.01 for steel. County will furnish materials.

North Yakima, Wash.—County commissioners will receive bids until September 4 for construction of combination bridge east of Grandview.

Redwood City, Cal.—Bids will be received until September 11 by J. H. Nash, county clerk, for construction of reinforced concrete bridge across San Gregorio creek.

Salinas, Cal.—Bids will be received until September 15 by T. P. Joy, county clerk, for repairing Salinas river bridge at Gonzales.

San Bernardino, Cal.—Bids will be received until September 25 by L. R. Patty, county clerk, for construction of 108-ft. steel-truss bridge across San Timoteo creek.

Contract for repairing Orange Street bridge and Tippecanoe bridge has been awarded to Mercereau Bridge & Construction Co., Pacific Electric Bdg., Los Angeles, for $20,200.

San Diego, Cal.—Contract for construction of 2000-ft. pile trestle bridge across San Diego river near Lakeside has been awarded to Fred Steffgen for $17,844.

Election will be held in November to vote on bond issue of $50,000, $44,000 for construction of bridge across San Diego river at Oldtown, and $6000 for construction of bridge across Rose canyon.

Santa Barbara, Cal.—Bids will be received until September 6 by C. A. Hunt, county clerk, for construction of reinforced concrete bridge on state highway across Arroyo Quemado. Bridge will have two 110-ft. arch spans. Estimated cost is $48,000.

South Bend, Wash.—Contract for construction of 40-ft. reinforced concrete bridge over Fern creek has been awarded to Charles G. Huber, Seattle, for $2324. Andrews & Harrar bid $2988.56.

Contract for construction of 75-ft. reinforced concrete bridge over Forks creek has been awarded to Charles G. Huber for $3573. Andrews & Harrar bid $4488.56.

Visalia, Cal.—Bids will be received until September 8 by George R. Prestidge, county clerk, for construction of reinforced concrete bridge, 132 ft. long across Tule river near Springville.

IRRIGATION AND WATER SUPPLY

Anderson, Cal.—Contract for furnishing 100 tons of structural steel to Anderson-Cottonwood irrigation district has been awarded to Palm Iron Works, Sacramento.

Covina, Cal.—Following bids were received for extension of water system: Furnishing and laying 9340 ft. of 12-in. 14-gauge riveted-steel pipe, including specials: Consolidated Pipe Co., $6900; Western Pipe & Steel Co., $7123.92; Baker Iron Works, $7847; Lacy Manufacturing Co., $8521; American Steel Pipe & Tank Co., $8693.50.

Furnishing 10,000 ft. of 4-in., 9560 ft. of 6-in., and 4290 ft. of 8-in. O. D. casing; Fairbanks, Morse & Co., $2610 for 4-in., $4563 for 6-in., and $7300 for 8-in.; Crane & Co., $2690, $4709, and $7578, with an alternate bid of $2256, $3719, and $5951 for Matheson pipe; Smith-Booth-Usher Co., $2817, $4712, and $7836.

Doyle, Cal.—Honey Lake Mutual Water Users' Association has been organized. Plans include concrete storage dams and canals. C. J. Young is a director.

Fort Laramie, Wyo.—Bids will be received until September 28 at office of U. S. Reclamation Service for earthwork and structures on 19 miles of main canal, Fort Laramie unit, North Platte project, including 1,656,000 cu. yd. excavation, and 1450 cu. yd concrete. Work is near Torrington and Lingle on the Bridgeport-Guernsey branch of the Chicago, Burlington & Quincy railroad.

Glendive, Mont.—Contract for improvement of water system has been awarded to Norwood Engineering Co., Florence, Mass., for $33,570. Contract for furnishing cast-iron pipe has been awarded to American Cast-Iron Pipe Co. at $45.35 per ton for 10-in. pipe and $42.35 for 8-in. pipe.

Malta, Mont.—Bids will be received until September 27 at office of U. S. Reclamation Service for construction of structures on the Milk River project. Work includes 10,000 cu. yd. excavation, 600 cu. yd. reinforced concrete, 1300 sq. yd. paving, and the placing of 40,000 lb. reinforcing steel and 134,000 ft. B. M. lumber. Work is near Saco and Beaverton, on the Great Northern railway.

James O'Connor and John T. Whalin were the only bidders at $108,352.50 for earthwork on Nelson reservoir, South canal, Milk River project.

Paradise, Cal.—Plans have been completed for irrigation system for Paradise irrigation district including dam 80 ft. high. I. E. Goodner is engineer. System will cover 3000 acres.

Pocatello, Ida.—Election has been called for September 14 to vote on bond issue of $300,000 for improvements and extensions to water system.

Salt Lake City, Utah.—Dixie Irrigation Co. is preparing plans for construction of canal system irrigating 20,000 acres in Washington county. Clarence S. Jarvis is engineer.

San Diego, Cal.—Election will be held in November to vote on bond issue of $682,200 for construction of concrete dam at Lower Otay site. Proposal to include an issue of $690,400 more for construction of Barrett dam was defeated.

Election will be called to vote on bond issue of $85,000 for construction of reinforced concrete apron on Morena dam.

San Francisco, Cal.—Bids will be received at the office of the constructing quartermaster, Fort Mason, until September 18, for construction of improvements to water-supply system at Presidio.

San Rafael, Cal.—Mass meeting of water-users has voted to make arrangement for construction by Marin Water & Power Co. of dam costing $50,000 at Bon Tempe site.

Willows, Cal.—Petitions have been presented to Board of Supervisors for formation of Jacinto irrigation district containing 19,650 acres, and Princeton-Codora-Glenn district containing 18,200 acres. Moody & Bell are attorneys for both projects.

LIGHT, HEAT, AND POWER.

Los Angeles, Cal.—Bids will be received until September 11 by Board of Supervisors for construction of 283 ornamental lighting-standards in Bonita Meadows lighting district.

Oroville, Cal.—Great Western Power Co. has completed plans for construction of developing 100,000-hp. plant in Feather River canyon near Belden. Plans include concrete aqueduct from Lake Almanor. Total estimated cost is $25,000,000.

Redding, Cal.—No bids for construction of lighting system were received, and work will be done by day labor.

Generated on 2024-09-30 01:12 GMT / https://hdl.handle.net/2027/uiug.30112007838425
Public Domain, Google-digitized / http://www.hathitrust.org/access_use#pd-google
Digitized by Google
Original from UNIVERSITY OF ILLINOIS AT URBANA-CHAMPAIGN

RIVER AND HARBOR WORK

Newport Beach, Cal.—Election has been called for September 25 to vote on bond issue of $125,000 for construction of jetties.

Salinas, Cal.—Bids will be received until September 15 by T. P. Joy, county clerk, for construction of bank protection on Salinas river near King City bridge.

Bids will also be received until the same time for construction of bank protection on Salinas river above Hilltown bridge.

Seattle, Wash.—Bids will be received until September 5 by Max G. Schmidt, secretary commercial water district No. 1, for construction of mattress for bank protection on Duwamish river.

RAILROAD WORK

Glendale, Cal.—Glendale & Montrose Railroad Co. will spend $100,000 on improvements and equipment for railroad. W. J. Bohan is general manager.

Portland, Ore.—Surveys for the proposed Oregon, California & Eastern railroad are practically completed. There will be about 450 miles of line in all. Robert Strahorn is interested.

Roseburg, Ore.—Bids will be received by city clerk until September 6 for construction of Roseburg & Eastern railroad. Estimated cost is $300,000.

San Francisco, Cal.—Panoche Valley Railroad Co. has applied to State Railroad Commission for permission to construct railroad from Los Banos through Panoche valley to Ashurst ranch in San Benito county, about 42 miles. H. W. Altman, 1043 South Union street, Los Angeles, is interested.

Visalia, Cal—Atchison, Topeka & Santa Fe Railroad has completed surveys for branch from Visalia to Woodville.

BUILDING CONSTRUCTION

Berkeley, Cal.—Contract for construction of reinforced concrete retaining walls for Franklin P. Nutting, has been awarded to F. E. Nelson, 565 16th street, Oakland, for $2500.

Burley, Ida.—Bond issue of $200,000 for construction of city hall, water system, and electric-lighting plant has been voted.

Danville, Cal.—Keller & Crane, San Francisco, were low bidders at $12,680 for construction of building for high school.

Fresno, Cal.—Bids will be received until September 5 by W. H. Ryan, city clerk, for removing old roof on city hall and putting on new four-ply felt and gravel roof.

Fullerton, Cal.—Bond issue of $35,000 for construction of additional buildings for high school has been voted.

Lakeport, Cal.—Contract for construction of building for high school has been awarded to Kerr & McLean, San Francisco.

Modesto, Cal.—First National Bank will spend $35,000 in remodeling building.

Placerville, Cal.—Bids will be received until September 8 by Mrs. Henry Levy, clerk of board of school trustees, for construction of school building. Estimated cost is $30,000. Plans from clerk, or from N. W. Sexton Co., 512 Merchants National Bank Bdg., San Francisco, upon deposit of $10.

San Jose, Cal.—Monson Bros., 1907 Bryant street, San Francisco, were low bidders at $42,960 for construction of addition to high school. Other bidders were: J. H. Miller, $44,568; Morrison Bros., $45,277; Charles Thomas, $45,544; Z. O. Field, $48,176; F. T. Edmans, $48,226; Boyajohn-Arnold Co., $49,450; R. O. Summers, $51,460. Three lowest bids were taken under advisement until September 19.

Sumner, Wash.—Contract for construction of $40,000 addition to mill of Northern Board & Paper Co. has been awarded to H. D. Stewart, American Bank Bdg., Seattle.

Vallejo, Cal.—Sperry Flour Co. will construct $150,000 reinforced concrete warehouse in the place of one recently burned.

Visalia, Cal.—Bids will be received until September 11 by Charles T. Pool, secretary board of education, for construction of brick school-building. Estimated cost is $35,000. Swartz & Swartz, Rowell Bdg., Fresno, are architects.

MACHINERY AND SUPPLIES

Auburn, Cal.—All bids for furnishing cement for pavement construction have been rejected and cement will be purchased in open market.

Buenos Aires, Argentine Republic.—Bids will be received until October 13 by the Obras Sanitarias de la Nacion (Argentine public-health works) for furnishing about 60,000 tons of cast-iron pipe.

Chico, Cal.—Contract for furnishing combination fire-engine and hose-wagon has been awarded to Seagrave Automobile Co. for $10,000.

Denver, Colo.—Bids will be received until September 20 at office of U. S. Reclamation Service for furnishing needle valves for the north tunnel of Roosevelt dam, Salt River project, Arizona.

Redwood City, Cal.—Supervisor C. V. Thompson, Pescadero, has been authorized to purchase pump and tank for pumping sea-water for sprinkling highways.

Spokane, Wash.—American Cast Iron Pipe Co. was low bidder at $43 per ton for furnishing 6-in. cast-iron pipe to city in 16-ft. lengths. For 12-ft. pipe American Cast Iron Pipe Co., U. S. Cast Iron Pipe Co., and Crane Co. each bid $42 per ton. American Cast Iron Pipe Co. bid $65 per ton for fittings.

Washington, D. C.—Bids will be received until September 12 by Bureau of Supplies and Accounts, Navy Department, for delivery at Mare Island, Cal., of the following: 180 pairs loose-pin hinges, 256 pairs bronze strap-hinges, 1800 bronze draw-pulls, miscellaneous quantity of cup-hooks, and cotter pins, schedule 30; 8 steam-traps, schedule 31. Particulars from Purchasing Pay Officer, U. S. Navy Pay Office, San Francisco.

MISCELLANEOUS

Stockton, Cal.—Bids will be received until September 5 by G. W. Pulich, city clerk, for construction of 24 iron gates on south side of shed occupied by California Navigation & Improvement Company.

REQUEST FOR BIDS

COUNTY HIGHWAY CONSTRUCTION

COUNTY HIGHWAY COMMISSION
COUNTY OF KINGS, STATE OF CALIFORNIA

Sealed proposals addressed to the Board of Supervisors, County of Kings, State of California, and endorsed, "PROPOSALS FOR CONSTRUCTING HIGHWAY NO. 3, DIVISION 2, AND HIGHWAY NO. 3, DIVISION 1A, SECTION 2, AND HIGHWAY NO. 3, DIVISION 1A, SECTION 3, (Guernsey east and south, Corcoran north and west)" will be received by the Board at its office in the County Court House at Hanford, California, until 2:00 o'clock P.M. of the 7th day of September, 1916, and at that time and place will be publicly opened and read.

Plans, specifications and blank forms of proposal for work may be obtained at the office of the Kings County Highway Commission, Hanford, California; a charge of Five Dollars ($5.00) (not returnable) will be made for each set of plans and specifications. All proposals must be made on said blank forms, must give the prices proposed, both in writing and figures, and must be signed by the bidder with his address. The phraseology of the proposal must not be changed and any alteration made by the bidder will make the proposal informal and liable to rejection.

Each bid to be presented under sealed cover and shall be accompanied by cash, a bidder's bond or a certified check made payable to the order of the Chairman of the Board of Supervisors of the County of Kings, State of California, for an amount equal to at least ten (10) per cent of the amount of said bid, and no bid shall be considered unless such cash, bond or check is enclosed therewith, such cash, bond or check to be returned to the bidder unless forfeited under the conditions herein stipulated.

A good and satisfactory bond will be required for the faithful performance of the contract in a sum equal to twenty-five (25) per cent of the amount of the contract, and a further bond in a sum equal to one-half of the amount of the contract must be furnished as required by the terms of an act entitled, "AN ACT TO SECURE THE PAYMENT OF THE CLAIMS OF MATERIALMEN, MECHANICS OR LABORERS EMPLOYED BY CONTRACTORS UPON STATE, MUNICIPAL AND OTHER PUBLIC WORKS," approved March 27, 1897, and acts amendatory thereof. The sureties on both bonds must be approved by the Board of Supervisors.

The quantities to be bid on are as follows:

TYPE A (16 FOOT WIDTH)

1. 18,000 cubic yards of EXCAVATION (including borrow).
2. 1,302,369 sq. ft. of two and one-half (2½) inch ASPHALTIC CONCRETE BASE (surface area).
3. or 4. 1,302,369 sq. ft. of one and one-half (1½) inch TOPEKA OR WARRENITE WEARING SURFACE.
5. 300 lin. feet of STANDARD GUARD FENCE.
6. 1,302,369 sq. ft. of four (4) inch ASPHALTIC CONCRETE PAVEMENT (surface area) including sand wearing surface.

TYPE B (15 FOOT WIDTH)

1. 18,000 cubic yards of EXCAVATION (including borrow).
2. 1,221,172 sq. ft. of two and one-half (2½) inch ASPHALTIC CONCRETE BASE (surface area).
3. or 4. 1,221,172 sq. ft. of one and one-half (1½) inch TOPEKA OR WARRENITE WEARING SURFACE.
5. 300 lin. feet of STANDARD GUARD FENCE.
6. 1,221,172 sq. ft. of four (4) inch ASPHALTIC CONCRETE PAVEMENT (surface area) including sand wearing surface.

The bidder to whom the contract may be awarded will be required to appear at the office of the Board of Supervisors, with the securities offered by him, and execute a contract within ten (10) days, (not including Sunday) after it is awarded to him. In case of failure or neglect to do so, he may be considered as having abandoned it, and the cash, bond or check accompanying the proposal may, at the option of the Board of Supervisors, be forfeited to the County of Kings, State of California.

All bids will be compared on the basis of the estimated quantities of work to be done, as shown in the specifications.

The Board of Supervisors reserves the right to reject any or all proposals.

BOARD OF SUPERVISORS OF THE COUNTY OF KINGS,
STATE OF CALIFORNIA
By J. M. McCLELLAN, Chairman.

Attest: E. F. PICKERILL, Clerk.
Hanford, California, August 23rd, 1916.

Generated on 2024-09-30 01:11 GMT / https://hdl.handle.net/2027/uiug.30112007838425
Public Domain, Google-digitized / http://www.hathitrust.org/access_use#pd-google
Digitized by Google
Original from UNIVERSITY OF ILLINOIS AT URBANA-CHAMPAIGN